Samsung ML- 4550 Series

Monochrome Laser Printer

User's Guide

SAMSUNG

This manual is provided for information purposes only. All information included herein is subject to change without notice. Samsung Electronics is not responsible for any direct or indirect damages, arising from or related to use of this manual.

© 2006 Samsung Electronics Co., Ltd. All rights reserved.

- ML-4550, ML-4551N, and ML-4551ND are trademarks of Samsung Electronics Co., Ltd.
- Samsung and Samsung logo are trademarks of Samsung Electronics Co., Ltd.
- Centronics is a trademark of Centronics Data Computer Corporation.
- IBM and IBM PC are trademarks of International Business Machines Corporation.
- PCL and PCL 6 are trademarks of Hewlett-Packard company.
- Microsoft, Windows, Windows Vista, Windows 7 and Windows 2008 Server R2 are either registered trademarks or trademarks of Microsoft Corporation.
- PostScript 3 is a trademark of Adobe System, Inc.
- UFST® and MicroType™ are registered trademarks of Monotype Imaging Inc.
- TrueType, LaserWriter, and Macintosh are trademarks of Apple Computer, Inc.
- All other brand or product names are trademarks of their respective companies or organizations.
- Refer to the 'LICENSE.txt' file in the provided CD-ROM for the open source license information.

contact samsung worldwide

If you have any comments or questions regarding Samsung products, contact the Samsung customer care center.

COUNTRY/REGION	CUSTOMER CARE CENTER	WEB SITE
ARGENTINE	0800-333-3733	www.samsung.com/ar
AUSTRALIA	1300 362 603	www.samsung.com/au
AUSTRIA	0810-SAMSUNG (7267864, € 0.07/min)	www.samsung.com/at
BELARUS	810-800-500-55-500	www.samsung/ua www.samsung.com/ua_ru
BELGIUM	02 201 2418	www.samsung.com/be (Dutch) www.samsung.com/be_fr (French)
BRAZIL	0800-124-421 4004-0000	www.samsung.com/br
CANADA	1-800-SAMSUNG (726-7864)	www.samsung.com/ca
CHILE	800-SAMSUNG (726-7864)	www.samsung.com/cl
CHINA	400-810-5858 010-6475 1880	www.samsung.com/cn
COLOMBIA	01-8000112112	www.samsung.com.co
COSTA RICA	0-800-507-7267	www.samsung.com/latin
CZECH REPUBLIC	800-SAMSUNG (800-726786)	www.samsung.com/cz
	Samsung Zrt., česká organizační složka, Oasis Florenc, Sokolovská394/17, 180 00, Praha 8	
DENMARK	8-SAMSUNG (7267864)	www.samsung.com/dk
ECUADOR	1-800-10-7267	www.samsung.com/latin
EL SALVADOR	800-6225	www.samsung.com/latin
ESTONIA	800-7267	www.samsung.com/ee
KAZAKHSTAN	8-10-800-500-55-500	www.samsung.com/kz_ru
KYRGYZSTAN	00-800-500-55-500	
FINLAND	30-6227 515	www.samsung.com/fi
FRANCE	01 4863 0000	www.samsung.com/fr
GERMANY	01805 - SAMSUNG (726-7864 € 0,14/min)	www.samsung.de
GUATEMALA	1-800-299-0013	www.samsung.com/latin
HONDURAS	800-7919267	www.samsung.com/latin
HONG KONG	3698-4698	www.samsung.com/hk www.samsung.com/hk_en/

COUNTRY/REGION	CUSTOMER CARE CENTER	WEB SITE
HUNGARY	06-80-SAMSUNG (726-7864)	www.samsung.com/hu
INDIA	3030 8282 1800 110011 1800 3000 8282	www.samsung.com/in
INDONESIA	0800-112-8888	www.samsung.com/id
ITALIA	800-SAMSUNG (726-7864)	www.samsung.com/it
JAMAICA	1-800-234-7267	www.samsung.com/latin
JAPAN	0120-327-527	www.samsung.com/jp
LATVIA	8000-7267	www.samsung.com/lv
LITHUANIA	8-800-77777	www.samsung.com/lt
LUXEMBURG	02 261 03 710	www.samsung.com/lu
MALAYSIA	1800-88-9999	www.samsung.com/my
MEXICO	01-800-SAMSUNG (726-7864)	www.samsung.com/mx
MOLDOVA	00-800-500-55-500	www.samsung/ua www.samsung.com/ua_ru
NETHERLANDS	0900-SAMSUNG (0900-7267864) (€ 0,10/min)	www.samsung.com/nl
NEW ZEALAND	0800 SAMSUNG (0800 726 786)	www.samsung.com/nz
NICARAGUA	00-1800-5077267	www.samsung.com/latin
NORWAY	3-SAMSUNG (7267864)	www.samsung.com/no
PANAMA	800-7267	www.samsung.com/latin
PHILIPPINES	1800-10-SAMSUNG (726-7864) 1-800-3-SAMSUNG (726-7864) 1-800-8-SAMSUNG (726-7864) 02-5805777	www.samsung.com/ph
POLAND	0 801 1SAMSUNG (172678) 022-607-93-33	www.samsung.com/pl
PORTUGAL	80820-SAMSUNG (726-7864)	www.samsung.com/pt
PUERTO RICO	1-800-682-3180	www.samsung.com/latin
REP. DOMINICA	1-800-751-2676	www.samsung.com/latin
EIRE	0818 717 100	www.samsung.com/ie

COUNTRY/REGION	CUSTOMER CARE CENTER	WEB SITE
RUSSIA	8-800-555-55-55	www.samsung.ru
SINGAPORE	1800-SAMSUNG (726-7864)	www.samsung.com/sg
SLOVAKIA	0800-SAMSUNG (726-7864)	www.samsung.com/sk
SOUTH AFRICA	0860 SAMSUNG (726-7864)	www.samsung.com/za
SPAIN	902-1-SAMSUNG(902 172 678)	www.samsung.com/es
SWEDEN	0771 726 7864 (SAMSUNG)	www.samsung.com/se
SWITZERLAND	0848-SAMSUNG (7267864, CHF 0.08/min)	www.samsung.com/ch
TADJIKISTAN	8-10-800-500-55-500	
TAIWAN	0800-329-999	www.samsung.com/tw
THAILAND	1800-29-3232 02-689-3232	www.samsung.com/th
TRINIDAD & TOBAGO	1-800-SAMSUNG (726-7864)	www.samsung.com/latin
TURKEY	444 77 11	www.samsung.com/tr
U.A.E	800-SAMSUNG (726-7864) 8000-4726	www.samsung.com/ae
U.K	0845 SAMSUNG (726-7864)	www.samsung.com/uk
U.S.A	1-800-SAMSUNG (7267864)	www.samsung.com/us
UKRAINE	8-800-502-0000	www.samsung/ua www.samsung.com/ua_ru
UZBEKISTAN	8-10-800-500-55-500	www.samsung.com/kz_ru
VENEZUELA	0-800-100-5303	www.samsung.com/latin
VIETNAM	1 800 588 889	www.samsung.com/vn

CONTENTS

1. Introduction

Special features 1.1
Printer overview 1.3
Finding more information 1.4
Selecting a location 1.5

2. System setup

Using control panel menus 2.1
Menu overview 2.2
Printing a demo page 2.8
Changing the display language 2.8
Using toner save mode 2.8
Changing the font setting 2.8

3. Software overview

Supplied software 3.1
Printer driver features 3.2
System requirements 3.2

4. Network setup

Introduction 4.1
Supported operating systems 4.1
Configuring TCP/IP 4.1
Configuring EtherTalk 4.2
Configuring IPX frame types 4.2
Setting Ethernet speed 4.2
Restoring the network configuration 4.3
Printing a network configuration page 4.3

5. Loading print media

Selecting print media 5.1
Loading paper 5.4
Selecting an output location 5.8

6. Basic printing

Printing a document 6.1
Canceling a print job 6.1

7. Ordering supplies and accessories

Toner cartridges 7.1
Accessories 7.1
How to purchase 7.1

8. Maintenance

Printing information pages 8.1
Cleaning the printer 8.1
Maintaining the toner cartridge 8.3
Maintenance parts 8.7

9. Troubleshooting

Clearing paper jams 9.1
Troubleshooting checklist 9.5
Understanding the status LED 9.6
Understanding display messages 9.6
Toner cartridge-related messages 9.8
Solving general printing problems 9.9
Solving print quality problems 9.11
Common Windows problems 9.13
Common PostScript problems 9.13
Common Linux problems 9.14
Common Macintosh problems 9.14

10. Installing accessories

Precautions when installing accessories 10.1
Installing a dual in-line memory module (DIMM) 10.1
Installing a network interface card 10.3
Using the hard disk 10.4

11. Specifications

Printer specifications 11.1

Important Precautions and Safety Information

When using this machine, these basic safety precautions should always be followed to reduce risk of fire, electric shock, and injury to people:

1 Read and understand all instructions.

2 Use common sense whenever operating electrical appliances.

3 Follow all warnings and instructions marked on the machine and in the literature accompanying the machine.

4 If an operating instruction appears to conflict with safety information, heed the safety information. You may have misunderstood the operating instruction. If you cannot resolve the conflict, contact your sales or service representative for assistance.

5 Unplug the machine from the AC wall socket before cleaning. Do not use liquid or aerosol cleaners. Use only a damp cloth for cleaning.

6 Do not place the machine on an unstable cart, stand or table. It may fall, causing serious damage.

7 Your machine should never be placed on, near or over a radiator, heater, air conditioner or ventilation duct.

8 Do not allow anything to rest on the power cable. Do not locate your machine where the cords will be abused by persons walking on them.

9 Do not overload wall outlets and extension cords. This can diminish performance, and may result in the risk of fire or electric shock.

10 Do not allow pets to chew on the AC power or PC interface cords.

11 Never push objects of any kind into the machine through case or cabinet openings. They may touch dangerous voltage points, creating a risk of fire or shock. Never spill liquid of any kind onto or into the machine.

12 To reduce the risk of electric shock, do not disassemble the machine. Take it to a qualified service technician when repair work is required. Opening or removing covers may expose you to dangerous voltages or other risks. Incorrect reassembly could cause electric shock when the unit is subsequently used.

13 Unplug the machine from the PC and AC wall outlet, and refer servicing to qualified service personnel under the following conditions:
- When any part of the power cord, plug, or connecting cable is damaged or frayed.
- If liquid has been spilled into the machine.
- If the machine has been exposed to rain or water.
- If the machine does not operate properly after instructions have been followed.
- If the machine has been dropped, or the cabinet appears damaged.
- If the machine exhibits a sudden and distinct change in performance.

14 Adjust only those controls covered by the operating instructions. Improper adjustment of other controls may result in damage, and may require extensive work by a qualified service technician to restore the machine to normal operation.

15 Avoid using this machine during a lightning storm. There may be a remote risk of electric shock from lightning. If possible, unplug the AC power for the duration of the lightning storm.

16 If you continuously print multiple pages, the surface of the output tray may become hot. Be careful not to touch the surface, and keep children away from the surface.

17 The Power cord supplied with your machine should be used for safe operation. If you are using a cord which is longer than 2 m with 110 V machine, then it should be 16 AWG[1] or bigger.

18 SAVE THESE INSTRUCTIONS.

Environmental and Safety Consideration

Laser Safety Statement

The printer is certified in the U.S. to conform to the requirements of DHHS 21 CFR, chapter 1 Subchapter J for Class I(1) laser products, and elsewhere, is certified as a Class I laser product conforming to the requirements of IEC 825.

Class I laser products are not considered to be hazardous. The laser system and printer are designed so there is never any human access to laser radiation above a Class I level during normal operation, user maintenance, or prescribed service condition.

WARNING

Never operate or service the printer with the protective cover removed from Laser/Scanner assembly. The reflected beam, although invisible, can damage your eyes. When using this product, these basic safety precautions should always be followed to reduce risk of fire, electric shock, and injury to persons:

CAUTION - CLASS 3B LASER RADIATION WHEN OPEN AVOID EXPOSURE TO THE BEAM.
DANGER - LASER RADIATION AVOID DIRECT EXPOSURE TO BEAM.
DANGER - RADIATIONS INVISIBLES DU LASER EN CAS D'OUVERTURE. EVITER TOUTE EXPOSITION DIRECTE AU FAISCEAU.
VORSICHT - UNSICHTBARE LASERSTRAHLUNG, WENN ABDECKUNG GEÖFFNET. NICHT DEM STRAHL AUSSETZEN.
ATTENZIONE - RADIAZIONE LASER INVISIBILE IN CASO DI APERTURA. EVITARE L'ESPOSIZIONE AL FASCIO.
PRECAUCIÓN - RADIACIÓN LASER INVISIBLE CUANDO SE ABRE. EVITAR EXPONERSE AL RAYO.
PERIGO - RADIAÇÃO LASER INVISÍVEL AO ABRIR. EVITE EXPOSIÇÃO DIRECTA AO FEIXE.
GEVAAR - ONZICHTBARE LASERSTRALEN BIJ GEOPENDE KLEP. DEZE KLEP NIET OPENEN.
ADVARSEL - USYNLIG LASERSTRÅLNING VED ÅBNING. UNDGÅ UDSAETTELSE FOR STRÅLNING.
ADVARSEL. - USYNLIG LASERSTRÅLNING NÅR DEKSEL ÅPNES. UNNGÅ EKSPONERING FOR STRÅLEN.
VARNING - OSYNLIG LASERSTRÅLNING NÄR DENNA DEL ÄR ÖPPEN. STRÅLEN ÄR FARLIG.
VAROITUS - NÄKYMÄTÖNTÄ LASERSÄTEILYÄ AVATTAESSA. VARO SUORAA ALTISTUMISTA SÄTEELLE.
注 意 - 严禁揭开此盖, 以免激光泄露灼伤
주 의 - 이 덮개를 열면 레이저광에 노출될 수 있으므로 주의하십시오.

Ozone Safety

During normal operation, this machine produces ozone. The ozone produced does not present a hazard to the operator. However, it is advisable that the machine be operated in a well ventilated area.

If you need additional information about ozone, please contact your nearest Samsung dealer.

1 *AWG: American Wire Gauge*

Power Saver

This printer contains advanced energy conservation technology that reduces power consumption when it is not in active use.

When the printer does not receive data for an extended period of time, power consumption is automatically lowered.

Recycling

Please recycle or dispose of packaging materials for this product in an environmentally responsible manner.

Correct Disposal of This Product (Waste Electrical & Electronic Equipment)

(Applicable in the European Union and other European countries with separate collection systems)

This marking on the product, accessories or literature indicates that the product and its electronic accessories (e.g. charger, headset, USB cable) should not be disposed of with other household waste at the end of their working life. To prevent possible harm to the environment or human health from uncontrolled waste disposal, please separate these items from other types of waste and recycle them responsibly to promote the sustainable reuse of material resources. Household users should contact either the retailer where they purchased this product, or their local government office, for details of where and how they can take these items for environmentally safe recycling. Business users should contact their supplier and check the terms and conditions of the purchase contract. This product and its electronic accessories should not be mixed with other commercial wastes for disposal.

Radio Frequency Emissions

FCC Regulations

This device complies with Part 15 of the FCC Rules. Operation is subject to the following two conditions:

- This device may not cause harmful interference, and
- This device must accept any interference received, including interference that may cause undesired operation.

This device has been tested and found to comply with the limits for a Class A digital device, pursuant to Part 15 of the FCC rules. These limits are designed to provide reasonable protection against harmful interference in a residential installation. This equipment generates, uses and can radiate radio frequency energy and, if not installed and used in accordance with the instructions, may cause harmful interference to radio communications. However, there is no guarantee that interference will not occur in a particular installation. If this equipment does cause harmful interference to radio or television reception, which can be determined by turning the equipment off and on, the user is encouraged to try to correct the interference by one or more of the following measures:

- Reorient or relocate the receiving antenna.
- Increase the separation between the equipment and receiver.
- Connect the equipment into an outlet on a circuit different from that to which the receiver is connected.
- Consult the dealer or an experienced radio/TV technician for help.

CAUTION: Changes or modifications not expressly approved by the manufacturer responsible for compliance could void the user's authority to operate the equipment.

Canadian Radio Interference Regulations

This digital apparatus does not exceed the Class A limits for radio noise emissions from digital apparatus as set out in the interference-causing equipment standard entitled "Digital Apparatus", ICES-003 of the Industry and Science Canada.

Cet appareil numérique respecte les limites de bruits radioélectriques applicables aux appareils numériques de Classe A prescrites dans la norme sur le matériel brouilleur: "Appareils Numériques", ICES-003 édictée par l'Industrie et Sciences Canada.

Declaration of Conformity (European Countries)

Approvals and Certifications

The CE marking applied to this product symbolises Samsung Electronics Co., Ltd. Declaration of Conformity with the following applicable 93/68/EEC Directives of the European Union as of the dates indicated:

The declaration of conformity may be consulted at www.samsung.com/printer, go to Support > Download center and enter your printer name to browse the EuDoC.

January 1, 1995: Council Directive 73/23/EEC Approximation of the laws of the member states related to low voltage equipment.

January 1, 1996: Council Directive 89/336/EEC (92/31/EEC), approximation of the laws of the Member States related to electromagnetic compatibility.

March 9, 1999: Council Directive 1999/5/EC on radio equipment and telecommunications terminal equipment and the mutual recognition of their conformity.

A full declaration, defining the relevant Directives and referenced standards can be obtained from your Samsung Electronics Co., Ltd. representative.

Replacing the Fitted Plug (for UK Only)

Important

The mains lead for this machine is fitted with a standard (BS 1363) 13 amp plug and has a 13 amp fuse. When you change or examine the fuse, you must re-fit the correct 13 amp fuse. You then need to replace the fuse cover. If you have lost the fuse cover, do not use the plug until you have another fuse cover.

Please contact the people from you purchased the machine.

The 13 amp plug is the most widely used type in the UK and should be suitable. However, some buildings (mainly old ones) do not have normal 13 amp plug sockets. You need to buy a suitable plug adaptor. Do not remove the moulded plug.

Warning

If you cut off the moulded plug, get rid of it straight away.

You cannot rewire the plug and you may receive an electric shock if you plug it into a socket.

IMPORTANT WARNING: You must earth this machine.

The wires in the mains lead have the following color code:

- Green and Yellow: Earth
- Blue: Neutral
- Brown: Live

If the wires in the mains lead do not match the colors marked in your plug, do the following:

You must connect the green and yellow wire to the pin marked by the letter “E” or by the safety ‘Earth symbol’ or colored green and yellow or green.

You must connect the blue wire to the pin which is marked with the letter “N” or colored black.

You must connect the brown wire to the pin which is marked with the letter “L” or colored red.

You must have a 13 amp fuse in the plug, adaptor, or at the distribution board.

OPENSSL LICENSE

Copyright (c) 1998-2001 The OpenSSL Project. All rights reserved.

Redistribution and use in source and binary forms, with or without modification, are permitted provided that the following conditions are met:

1. Redistributions of source code must retain the above copyright notice, this list of conditions and the following disclaimer.
2. Redistributions in binary form must reproduce the above copyright notice, this list of conditions and the following disclaimer in the documentation and/or other materials provided with the distribution.
3. All advertising materials mentioning features or use of this software must display the following acknowledgment: "This product includes software developed by the OpenSSL Project for use in the OpenSSL Toolkit. (http://www.openssl.org/)"
4. The names "OpenSSL Toolkit" and "OpenSSL Project" must not be used to endorse or promote products derived from this software without
5. prior written permission. For written permission, please contact openssl-core@openssl.org.
6. Products derived from this software may not be called "OpenSSL" nor may "OpenSSL" appear in their names without prior written permission of the OpenSSL Project.
7. Redistributions of any form whatsoever must retain the following acknowledgment: "This product includes software developed by the OpenSSL Project for use in the OpenSSL Toolkit (http://www.openssl.org/)"

THIS SOFTWARE IS PROVIDED BY THE OpenSSL PROJECT ``AS IS'' AND ANY EXPRESSED OR IMPLIED WARRANTIES, INCLUDING, BUT NOT LIMITED TO, THE IMPLIED WARRANTIES OF MERCHANTABILITY AND FITNESS FOR A PARTICULAR PURPOSE ARE DISCLAIMED. IN NO EVENT SHALL THE OpenSSL PROJECT OR ITS CONTRIBUTORS BE LIABLE FOR ANY DIRECT, INDIRECT, INCIDENTAL, SPECIAL, EXEMPLARY, OR CONSEQUENTIAL DAMAGES (INCLUDING, BUT NOT LIMITED TO, PROCUREMENT OF SUBSTITUTE GOODS OR SERVICES; LOSS OF USE, DATA, OR PROFITS; OR BUSINESS INTERRUPTION) HOWEVER CAUSED AND ON ANY THEORY OF LIABILITY, WHETHER IN CONTRACT, STRICT LIABILITY, OR TORT (INCLUDING NEGLIGENCE OR OTHERWISE) ARISING IN ANY WAY OUT OF THE USE OF THIS SOFTWARE, EVEN IF ADVISED OF THE POSSIBILITY OF SUCH DAMAGE.

This product includes cryptographic software written by Eric Young(eay@cryptsoft.com). This product includes software written by Tim Hudson (tjh@cryptsoft.com).

ORIGINAL SSLEAY LICENSE

Copyright (C) 1995-1998 Eric Young (eay@cryptsoft.com) All rights reserved.

This package is an SSL implementation written by Eric Young (eay@cryptsoft.com). The implementation was written so as to conform with Netscapes SSL.

This library is free for commercial and non-commercial use as long as the following conditions are aheared to. The following conditions apply to all code found in this distribution, be it the RC4, RSA, lhash, DES, etc., code; not just the SSL code. The SSL documentation included with this distribution is covered by the same copyright terms except that the holder is Tim Hudson (tjh@cryptsoft.com). Copyright remains Eric Young's, and as such any Copyright notices in the code are not to be removed. If this package is used in a product, Eric Young should be given attribution as the author of the parts of the library used. This can be in the form of a textual message at program startup or in documentation (online or textual) provided with the package.

Redistribution and use in source and binary forms, with or without modification, are permitted provided that the following conditions are met:

1. Redistributions of source code must retain the copyright notice, this list of conditions and the following disclaimer.
2. Redistributions in binary form must reproduce the above copyright notice, this list of conditions and the following disclaimer in the documentation and/or other materials provided with the distribution.
3. All advertising materials mentioning features or use of this software must display the following acknowledgement: "This product includes cryptographic software written by Eric Young (eay@cryptsoft.com)" The word 'cryptographic' can be left out if the rouines from the library being used are not cryptographic related:-).
4. If you include any Windows specific code (or a derivative thereof) from the apps directory (application code) you must include an acknowledgement: "This product includes software written by Tim Hudson (tjh@cryptsoft.com)"

THIS SOFTWARE IS PROVIDED BY ERIC YOUNG ``AS IS'' AND ANY EXPRESS OR IMPLIED WARRANTIES, INCLUDING, BUT NOT LIMITED TO, THE IMPLIED WARRANTIES OF MERCHANTABILITY AND FITNESS FOR A PARTICULAR PURPOSE ARE DISCLAIMED. IN NO EVENT SHALL THE AUTHOR OR CONTRIBUTORS BE LIABLE FOR ANY DIRECT, INDIRECT, INCIDENTAL, SPECIAL, EXEMPLARY, OR CONSEQUENTIAL DAMAGES (INCLUDING, BUT NOT LIMITED TO, PROCUREMENT OF SUBSTITUTE GOODS OR SERVICES; LOSS OF USE, DATA, OR PROFITS; OR BUSINESS INTERRUPTION) HOWEVER CAUSED AND ON ANY THEORY OF LIABILITY, WHETHER IN CONTRACT, STRICT LIABILITY, OR TORT (INCLUDING NEGLIGENCE OR OTHERWISE) ARISING IN ANY WAY OUT OF THE USE OF THIS SOFTWARE, EVEN IF ADVISED OF THE POSSIBILITY OF SUCH DAMAGE.

The licence and distribution terms for any publically available version or derivative of this code cannot be changed. i.e. this code cannot simply be copied and put under another distribution licence [including the GNU Public Licence.]

1 Introduction

Congratulations on the purchase of your printer!

This chapter includes:

- **Special features**
- **Printer overview**
- **Finding more information**
- **Selecting a location**

Special features

Your new printer is equipped with several special features that improve the print quality. You can:

Print with excellent quality and high speed

- You can print up to **1200 x 1200 dpi** effective output. See the **Software Section**.
- Your printer prints A4-sized paper at up to 43 ppm[a] and letter-sized paper at up to 45 ppm. For duplex printing, your printer prints A4-sized paper at up to 29 ipm[b] and letter-sized paper at up to 30 ipm.

Handle paper flexibly

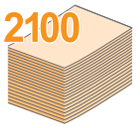

- The multi-purpose tray supports letterheads, envelopes, labels, transparencies, custom-sized materials, postcards, and heavy paper. The multi-purpose tray holds up to 100 sheets of plain paper.
- The **500-sheet standard tray 1** supports plain paper in various sizes.
- The **500-sheet optional tray** support plain paper in various sizes. You can install up to 3 additional trays.
- Two output tray; select either the output tray (face-down) or the rear cover (face-up) for the most convenient access.
- **Straight-through paper path** capability from the multi-purpose tray to the rear cover.

Create professional documents

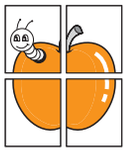

- Print **Watermarks**. You can customize your documents with words, such as “Confidential.” See the **Software Section**.
- Print **Posters**. The text and pictures of each page of your document are magnified and printed across the sheet of paper and can then be taped together to form a poster. See the **Software Section**.

a. pages per minute
b. images per minute

Save time and money

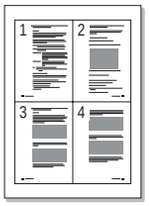

- This printer allows you to use toner save mode to save toner. See page 2.8.
- You can print on both sides of the paper to save paper (**double-sided printing**) if you use the **ML-4551ND** or install the optional duplex unit in the **ML-4550** and **ML-4551N**.
- You can print multiple pages on a single sheet of paper to save paper (**N-Up printing**). See the **Software Section**.
- You can use preprinted forms and letterhead with plain paper. See the **Software Section**.
- This printer automatically **conserves electricity** by substantially reducing power consumption when not in use.

Expand the printer capacity

- Your printer has 128 MB of memory which can be expanded to **512 MB**. See page 10.1.
- A **Network interface** enables network printing. You can add an optional network interface card to the **ML-4550**. The **ML-4551N** and **ML-4551ND** come with a built-in network interface, 10/100 Base TX.
- You can add 500-sheet optional trays to your printer. These trays let you add paper to the printer less often.
- A PostScript 3 Emulation* (PS) enables PS printing.

* Zoran IPS Emulation compatible with PostScript 3

- © Copyright 1995-2005, Zoran Corporation. All rights reserved. Zoran, the Zoran logo, IPS/PS3 and OneImage are trademarks of Zoran Corporation.

* 136 PS3 fonts

- Contains UFST and MicroType from Monotype Imaging Inc..

Use the optional hard disk

You can install an optional hard disk in your printer.

- The 40 GB hard disk can store the data from your computer in the print queue. This decreases the workload of the computer.
- You can use various print features, such as storing a job in the hard disk, proofing a job, and printing private documents.
- You can manage the print jobs in the print queue of the printer hard disk.

For details, see page 10.4.

Print in various environments

- You can print with various operating system such as Windows, Linux and Macintosh systems.
- Your printer comes with both **Parallel** and **USB** interfaces.
- You can also use a **network interface**. The **ML-4551N** and **ML-4551ND** come with a built-in network interface, 10/100 Base TX. However, you need to install the optional wired network interface card to the **ML-4550**.

Printer features

The table below lists a general overview of features supported by your printer.
(I: Installed, O: Option)

Features	ML-4550	ML-4551N	ML-4551ND
IEEE 1284 Parallel	I	I	I
USB 2.0	I	I	I
Network Interface (Ethernet 10/100 Base TX)	O	I	I
Hard Disk	O	O	O
PostScript* Emulation	I	I	I
Duplex Unit	O	O	I
Optional Tray 2	O	O	O
Optional Tray 3	O	O	O
Optional Tray 4	O	O	O

Printer overview

Front view

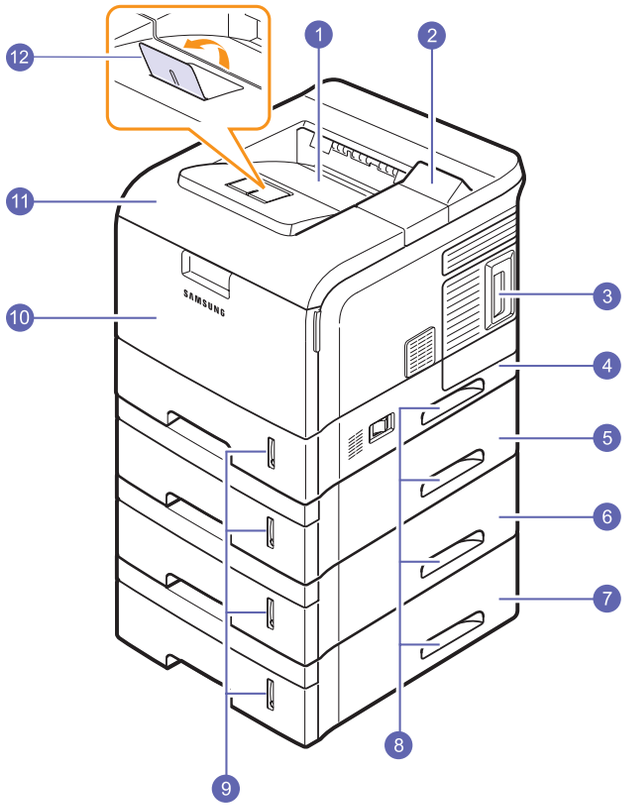

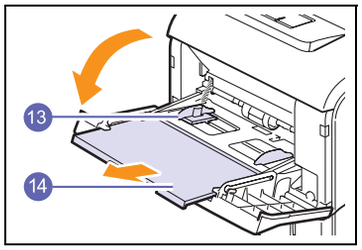

* The figure above shows an ML-4551ND with all available options.

1	output tray	8	handle
2	control panel	9	paper level indicator
3	control board cover	10	multi-purpose tray
4	tray 1	11	top cover
5	optional tray 2	12	output support
6	optional tray 3	13	multi-purpose tray paper width guides
7	optional tray 4	14	multi-purpose tray extension

Rear view

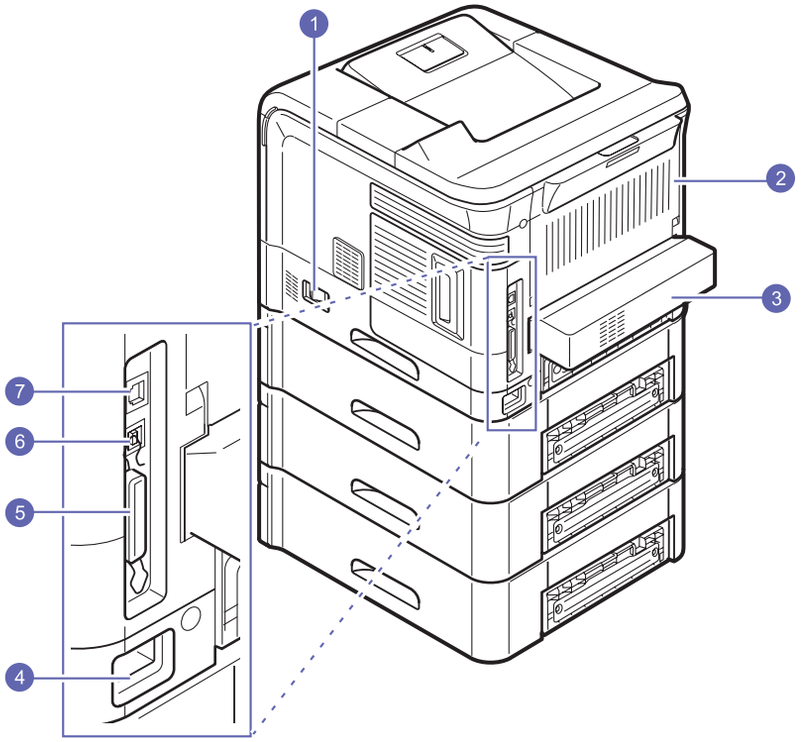

* The figure above shows an ML-4551ND with all available options.

1	power switch	5	parallel port
2	rear cover	6	USB port
3	duplex unit	7	network port
4	power receptacle		

Control panel overview

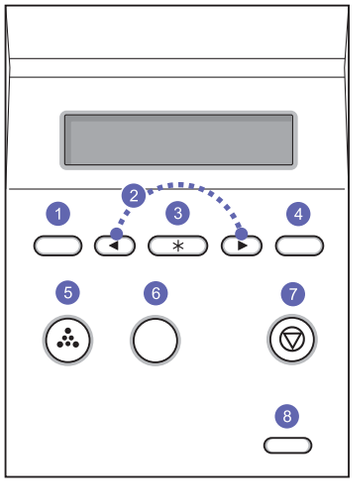

1	**Menu**: Enters Menu mode and scrolls through the available menus.
2	**Scroll** buttons: Scroll through the options available in the selected menu, and increase or decrease values.
3	**OK**: Confirms the selection on the display.
4	**Back**: Sends you back to the upper menu level.
5	**Toner Save**: Allows you to save on toner by using less toner in printing.
6	**Demo**: Prints a demo page.
7	**Stop**: Stops an operation at any time.
8	**Status**: Indicates the status of your printer. See page 9.6.

Finding more information

You can find information for setting up and using your printer from the following resources, either printed or onscreen.

Quick Install Guide 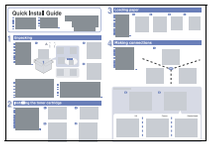	Provides information on setting up your printer and, therefore, be sure to follow the instructions in the guide to get the printer ready.
Online User's Guide 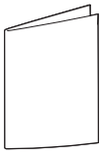	Provides you with step-by-step instructions for using your printer's full features, and contains information for maintaining your printer, troubleshooting, and installing accessories. This user's guide also contains the **Software Section** providing you with information on how to print documents with your printer on various operating systems, and how to use the supplied software utilities. **Note** • You can access the user's guides in other languages from the **Manual** folder on the printer driver CD.
Network Printer User's Guide 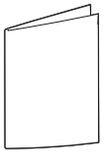	Contained on the network utilities CD, provides you with information on setting up and connecting your printer to a network.
Printer Driver Help 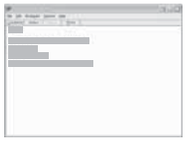	Provides you with help information on printer driver properties and instructions for setting up the properties for printing. To access a printer driver help screen, click **Help** from the printer properties dialog box.
Samsung Website	If you have Internet access, you can get help, support, printer drivers, manuals, and order information from the Samsung website, www.samsungprinter.com.

Note
- Please visit www.samsung.com for open source information.

Selecting a location

Select a level, stable place with adequate space for air circulation. Allow extra space for opening covers and trays.

The area should be well-ventilated and away from direct sunlight or sources of heat, cold, and humidity. Do not set the printer close to the edge of your desk or table.

Clearance space

Front: 482.6 mm (enough space so that trays can be opened or removed)

Back: 320 mm (enough space to allow opening of the rear cover or the duplex unit)

Right: 100 mm (enough space to allow opening of the control board cover)

Left: 100 mm (enough space for ventilation)

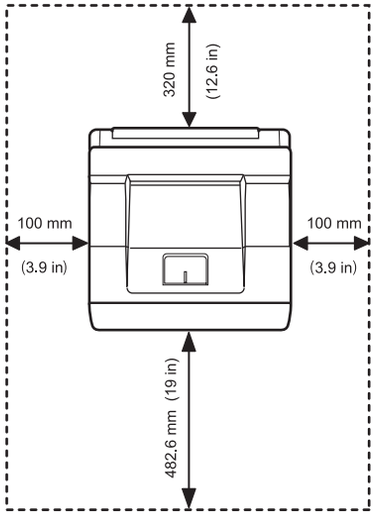

Note

- This equipment will be inoperable when mains power fails.

2 System setup

This chapter shows menus you can set and provides basic settings for your printer.

This chapter includes:

- **Using control panel menus**
- **Menu overview**
- **Printing a demo page**
- **Changing the display language**
- **Using toner save mode**
- **Changing the font setting**

Using control panel menus

A number of menus are available to make it easy for you to change the printer settings. The diagram on the next column shows the menus and all of the menu items available in each menu. The items in each menu and the options you can select are described in more detail in the tables beginning on page 2.2.

Accessing control panel menus

You can control your printer from the printer's control panel. You can also set the control panel menus while printing.

1 Press **Menu** until the menu you want appears on the bottom line of the display and press **OK**.

2 Press the **Scroll** buttons until the desired menu item appears and press **OK**.

3 If the menu item has sub menus, repeat step 2.

4 Press the **Scroll** buttons to access the desired setting option or the required value.

5 Press **OK** to save your selection.

An asterisk (*****) appears next to the selection on the display, indicating that it is now the default.

6 Press **Stop** to return to Standby mode.

Note

- Print settings made from the printer driver on a connected computer override the settings on the control panel.

Menu overview

The control panel menus are used to configure the printer. The control panel provides access to the foling menus.

The menus are listed based on the ML-4550 printer. The menus in the colored characters appear only when the optional items are installed.

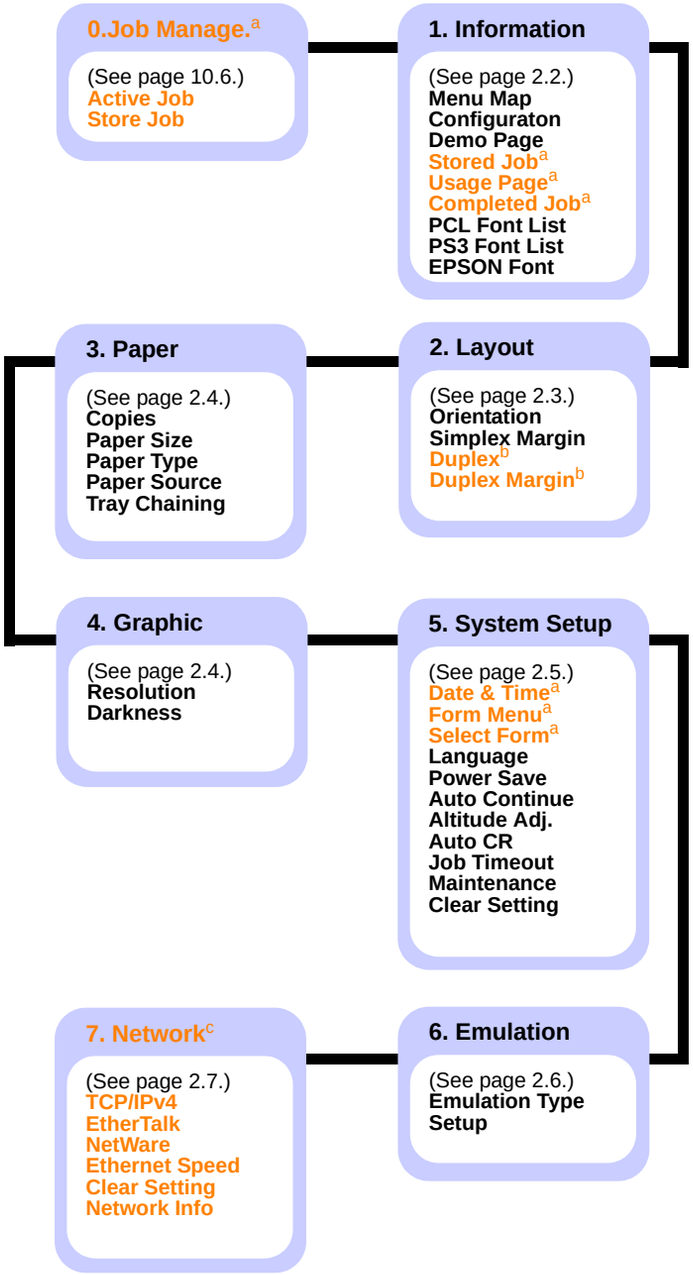

a. Available with an optional hard disk.
b. Available with an optional duplex unit in the ML-4550 or ML-4551N.
c. Available with an optional network interface card for the ML-4550.

Note

- The default settings and available values of your printer could be differ from this guide.

Job manager menu

This menu is available when the optional hard disk is installed.

Item	Explanation
Active Job	This menu shows the print jobs waiting to be printed. See page 10.7.
Store Job	This menu shows the print jobs stored in the installed hard disk. See page 10.6.

1. Information menu

This menu allows you to print printer information pages that give details about the printer and its configuration.

Item	Explanation
Menu Map	The menu map shows the layout and current settings of the control panel menu items.
Configuraton	The configuration page shows the printer's current configuration.
Demo Page	The demo page allows you to check if your printer properly performs printing. See page 2.8.
Stored Job	The stored job page shows the print file list stored in the optional hard disk. **Note** • This menu item is available when the optional hard disk is installed.
Usage Page	The usage page contains the total number of pages printed by person or group. This page can be used for cost accounting. **Note** • This menu item is available when the optional hard disk is installed.
Completed Job	The Completed Job page shows the list of completed print jobs. The list contains up to 50 files from the latest print jobs.
PCL Font List **PS3 Font List** **EPSON Font**	The font sample list shows all of the fonts currently available for the selected language.

2. Layout menu

Use the **2. Layout** menu to define all settings relating to output.

Item	Explanation
Orientation	Values: Portrait, Landscape Choose the default orientation of the print image on the page. Portrait Landscape
Simplex Margin	Values: Top Margin: 0, Left Margin: 0 Set the margin of print meterials for one-sided printing. You can increase or decrease the value in 0.1 mm increments. • **Top Margin**: Set the top margin, from 0 to 250 mm. • **Left Margin**: Set the left margin, from 0 to 164 mm.

Item	Explanation
Duplex	Values: Off, Long Edge, Short Edge To print on both sides of paper, choose the binding edge as follows. • **Long Edge**: Flip on the long edge. • **Short Edge**: Flip on the short edge. 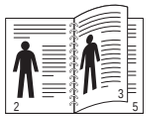 Long Edge in the Portrait orientation 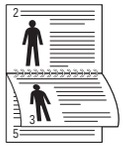 Long Edge in the Landscape orientation Short Edge in the Portrait orientation 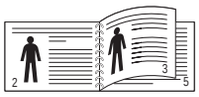 Short Edge in the Landscape orientation Select **Off** to print on one side of the paper. **Note** • In the ML-4550 and ML-4551N, this menu item is available when the optional duplex unit is installed.
Duplex Margin	Values: Top Margin/ Left Margin: 5.0, Short Binding/ Long Binding: 0 In this menu, you can set the margins for double-sided printing. You can increase or decrease the value in 0.1 mm increments. • **Top Margin**: Set the top margin, from 0.0 to 9.9 mm. • **Left Margin**: Set the left margin, from 0.0 to 9.9 mm. • **Short Binding**: Set the bottom margin of the back of the page for short binding, from 0 to 22 mm. • **Long Binding**: Set the right margin of the back of the page for long binding, from 0 to 22 mm. **Note** • In the ML-4550 and ML-4551N, this menu item is available when the optional duplex unit is installed.

3. Paper menu

Use the **3. Paper** menu to define all settings relating to print meterials such as paper feed and exit, as well as size and type the specific print meterials you are using with your printer.

Item	Explanation
Copies	Values: 1 ~ 999 Set the default number of copies by selecting any number from 1 to 999.
Paper Size	Values: A4, A5, A6, JIS B5, ISO B5, Letter, Legal, Executive, No.10 Env., Monarch Env., DL Env., C5 Env., C6 Env., US Folio, Oficio, Custom Paper Depending on the paper source or duplex setting, available options vary. Select the paper size currently loaded in the tray.
Paper Type	Values: Plain Paper, Bond, Transparency, Envelope, Labels, CardStock, Preprinted, Color Paper, Thick, Thin Select the paper type currently loaded in the tray.
Paper Source	Values: Tray 1, Tray 2, Tray 3, Tray 4, MP Tray, Manual Tray, Auto Select which tray you want to use. • If you select **Auto**, the printer can automatically determine the source. • Select **MP Tray** or **Manual Tray** to use the multi-purpose tray. If you select **Manual Tray**, you need to press **OK** each time you print a page. • **Tray 2**, **Tray 3**, or **Tray 4** is available only when the corresponding tray is installed.
Tray Chaining	Values: Off, On When you select any other value except **Auto** from **Paper Source** and the selected tray is empty, you can set the printer automatically to print from other trays. If this menu item is set to **Off**, the default LED lights red and the printer doesn't work until you insert paper into the specified tray.

Graphic menu

Use the **4. Graphic** menu to change settings affecting the quality of the printed characters and images.

Item	Explanation
Resolution	Values: 600dpi-Normal, 1200dpi-Best Specify the number of dots printed per inch (dpi). The higher the setting, the sharper printed characters and graphics. • If your print jobs are mostly text, select **600dpi-Normal** for the highest quality printing. • Select **1200dpi-Best** when your job contains bitmapped images, such as scanned photos or some graphics, that will benefit from enhanced line screening.
Darkness	Values: Normal, Light, Dark You can lighten or darken the print on the page by changing the toner density setting. The **Normal** setting usually produces the best result. Use the **Light** toner density setting to save toner.

System Setup menu

Use the **5. System Setup** menu to configure a variety of printer features.

Item	Explanation
Date & Time **Form Menu** **Select Form**	See page 10.6 and 10.7. **Note** • This menu item is available when the optional hard disk is installed.
Language	Values: English, FRANCAIS, Espanol, Portugues E., Portugues B., Deutsch, Italiano... This setting determines the language of the text that appears on the control panel display and information printing.
Power Save	Values: [5] Min, [10] Min, [15] Min, [30] Min, [60] Min, [120] Min When the printer does not receive data for an extended period of time, power consumption is automatically lowered. You can set how long the printer waits before going to power save mode.
Auto Continue	Values: Off, On This item determines whether or not the printer continues printing when it detects the paper unmatched to your paper setting. • **Off**: If a paper mismatch occurs, an error message will remain on the display and the printer will remain off-line until you insert the correct paper. • **On**: If the paper mismatch occurs, an error message will display. The printer will go offline for 30 seconds, then automatically clear the message and continue printing.
Altitude Adj.	Values: Plain, High, Higher, Highest You can optimize print quality according to your altitude.
Auto CR	Values: LF, LF+CR This item allows you to append the required carriage return to each line feed. Refer to the following samples: AA BB CC LF AA BB CC LF+CR

Item	Explanation
Job Timeout	Values:[0-1800] sec:15 You can set the length of time the printer waits before printing the last page of a print job that does not end with a command to print the page. When a print time-out occurs, the printer prints the page in the print buffer.
Maintenance	This item allows you to maintain your printer. • **Clean Drum**: Cleans the OPC drum of the toner cartridge and produces a cleaning sheet with toner debris on it. • **Clean Fuser**: Cleans the fuser unit inside of the printer and produces a cleaning sheet with toner debris on it. • **CLR Empty MSG.**: Prevents the **Toner Low Replace Toner** message from appearing on the display. Once you have selected **On**, this setting will be permanently written to the memory of the toner cartridge, and this menu will be disappeared from the **Maintenance** menu. • **Supplies Life**: Allows you to check how many pages have been printed and how much toner are left in the cartridge.
Clear Setting	This menu item allows you to restore the printer's factory default settings.

Emulation menu

Use the **6. Emulation** menu to configure printer language emulation.

Item	Explanation
Emulation Type	Values: Auto, PCL, PostScript, EPSON, HEXDUMP, PS3, IBM ProPrint The printer language defines how the computer communicates with the printer. If you select **Auto**, your printer can change the printer language automatically.
Setup	Values: PCL, PostScript, EPSON See the following tables to configure properties of the printer language.

PCL

This menu sets the PCL emulation configuration. You can set the font type, symbol type, lines per page, and font size.

Item	Explanation
Typeface	Values: PCL1 ~ PCL54 You can select the standard font to be used in PCL emulation. • PCL1~PCL7's interval between letters is fixed, and PCL8~PCL45's interval is proportional to the font type and font size. You can adjust the font size of PCL1~PCL7 using the **Pitch** item, and PCL8~PCL45 can do using **Point Size** item. • PCL46~PCL54's interval and font size are fixed.
Symbol	Values: ROMAN8 ~ PCCYRIL This item selects the symbol set to be used in PCL emulation. The symbol is the group of numbers, marks, and special signs being used when printing letters. Depending on the Typeface setting, available symbol sets vary.
Point Size	Values: 4.00 ~ 999.75 (0.25 unit) When you select one between PCL8 and PCL45 from the **Typeface** menu, you can determine the font size by setting the height of the characters in the font.
Courier	Values: Regular, Dark This item lets you select the version of Courier font to use.
Pitch	Values: 0.44 ~ 99.99 (0.01 unit) When you select one between PCL1 and PCL7 from the **Typeface** menu, you can determine the font size by setting the number of characters that will print in one horizontal inch of type. The default value, 10 is the best size.
Lines	Values: [5 ~ 128]:64 This item allows you to set vertical spacing from 5 to 128 lines for the default paper size. The default number of lines may differ according to the paper size and printing orientation.

PostScript

This menu provides you with the Print PS Error menu item.

Item	Explanation
Print PS Error	Values: On, Off You can select whether or not your printer prints an error list when a PS error occurs. • Select **On** to print PS 3 emulation errors. If an error occurs, the job stops processing, the error message prints, and the printer flushes the job. • If this menu is set to **Off**, the job is flushed without an indication of the error.

EPSON

This menu sets the EPSON emulation configuration.

Item	Explanation
Font	Values: SANSERIF, ROMAN You can select the default font will be used in EPSON emulation.
Character Set	Values: USA, FRANCE, GERMANY, UK, DENMARK1, SWEDEN, ITALY, SPAIN1, JAPAN, NORWAY, DENMARK2, SPAIN2, LATIN This item allows you to select a character set of the desired language.
Character Tab.	Values: ITALIC, PC437US, PC850 This item selects the character set.

Item	Explanation
Pitch	Values: 10, 12, 17.14, 20 You can determine the font size by setting the number of characters that will print in one horizontal inch of type.
LPI	Values: 6, 8 You can set the number of lines printed in one vertical inch.
Auto Wrap	Values: Off, On This item determines whether or not the printer automatically performs line feed when the data overflows the printable area of the print meterials.

Network menu

This menu lets you configure the network interface installed in your printer. You can reset the network interface and print a configuration page. For details, see page 4.1.

Item	Explanation
TCP/IP	Values: DHCP, BOOTP, Static This item allows you to manually set the TCP/IP addresses or receive the addresses from the network. • **DHCP**: The DHCP server allots the IP address to you automatically. • **BOOTP**: The BOOTP server allots the IP address to you automatically. • **Static**: You can enter IP Address, Subnet Mask, and Gateway manually.
EtherTalk	Values: Off, On This item lets you select whether or not you use the EtherTalk protocol. Select **On** to use the protocol.
NetWare	Values: Auto, 802.2, 802.3, Ethernet II, SNAP, Off This item lets you select the IPX frame type. • **Auto**: You can set the printer to select the frame type automatically. • **802.2**: Select this value to use the IEEE 802.2 frame type. • **802.3**: Select this value to use the IEEE 802.3 frame type. • **Ethernet II**: Select this value to use the Ethernet 2 frame type. • **SNAP**: Select this value to use the SNAP frame type. • **Off**: You can disable the NetWare protocol.
Ethernet Speed	Values: Auto, 10M Half, 10M Full, 100M Half, 100M Full This item allows you to select the ethernet speed.
Clear Setting	This item performs a simple reset and restores the factory default settings for the network configuration. This setting will only take effect after you restart the printer.
Network Info	This item prints a page showing the network parameters you set.

Printing a demo page

After setting up your printer, print a demo page to make sure that the printer is operating correctly.

Press and hold **Demo** for about 2 seconds.

Or,

1 Press **Menu** and then **OK** when **1. Information** appears.

2 Press the **Scroll** buttons until **Demo Page** appears and press **OK**.

3 Press **OK** when **Yes** appears.

A demo page prints out.

Changing the display language

To change the language that is displayed on the control panel, follow these steps:

1 Press **Menu** until **5. System Setup** appears on the bottom line of the display and press **OK**.

2 Press the **Scroll** buttons until **Language** appears and press **OK**.

3 Press the **Scroll** buttons to select the language you want and press **OK**.

4 Press **Stop** to return to Standby mode.

Using toner save mode

Toner save mode allows the printer to use less toner on each page. Activating this mode extends the life of your toner cartridge and reduces your cost per page beyond what one would experience in the normal mode, but it reduces print quality. This setting is not available with the **1200dpi-Best** setting.

There are two ways to enable this mode:

Using the control panel button

Press **Toner Save** on the control panel. The printer must be in Standby mode; the Status LED lights green and **Ready** is shown on the display.

- If the button backlight is on, the mode is enabled and the printer uses less toner to print a page.
- If the button backlight is off, the mode is disabled and the printer prints in normal mode.

From the software application

You can set toner save mode from the printer properties window on your printer driver. See the **Software Section**.

Changing the font setting

Your machine has preset the font for your region or country. If you want to change the font which you prefer or set the font under special condition such as the DOS environment, you can change the font setting as follows:

1 Press **Menu** on the **control panel** until you see **6. Emulation** feature.

2 Press **OK** to access the font setting.

3 Press the left/right arrow until **Setup** displays.

4 Press the left/right arrow until **PCL** displays.

5 Press the left/right arrow until **Symbol** displays.

6 Press the left/right arrow until your preferred font displays.

7 Press **OK**.

8 Press **Stop** to return to machine ready mode.

Note

Following information shows the proper font list for corresponding languages.

•Russian: CP866, Cyrillic

•Hebrew: 15Q, 8H, 0H (Israel only)

•Greek: GREEK, PC737

•Arabic & Farsi: ARABIC8, WINARABIC, PC864, FARSI, ISOARABIC.

3 Software overview

This chapter gives you an overview of the software that comes with your printer. Further details about installing and using the software are exed in the **Software Section**.

This chapter includes:

- **Supplied software**
- **Printer driver features**
- **System requirements**

Supplied software

After you have set up your machine and connected it to your computer, you must install the printer software. If you are a Windows or Macintosh OS, install the software from the supplied CD and if you are a Linux OS user, download the software from the Samsung website (www.samsung.com/printer) and install.:

OS	Contents
Windows	• **Printer driver**: Use this driver to take full advantage of your printer's features. • **Smart Panel**: This program allows you to monitor the printer's status and alerts you when an error occurs during printing. • **Direct Printing Utility**: This program allows you to print PDF files easily. • **Postscript Printer Description (PPD) file**: Use the PostScript driver to print documents with complex fonts and graphics in the PostScript language. • **User's Guide** in PDF
Linux	• **Printer driver**: Use this driver to run your printer from a Linux computer and print documents. • **Smart Panel**: This program allows you to monitor the printer's status and alerts you when an error occurs during printing.
Macintosh	• **Postscript Printer Description (PPD) file**: Use this file to run your printer from a Macintosh computer and print documents. • **Smart Panel**: This program allows you to monitor the printer's status and alerts you when an error occurs during printing.

Printer driver features

Your printer drivers support the following standard features:

- Paper source selection
- Paper size, orientation and media type
- Number of copies

In addition, you can use various special printing features. The following table shows a general overview of features supported by your printer drivers:

Feature	PCL 6	PostScript		
	Windows	Windows	Macintosh	Linux
Toner save	O	O	X	O
Print quality option	O	O	O	O
Poster printing	O	X	X	X
Multiple pages per sheet (N-up)	O	O	O	O (2, 4)
Fit to page printing	O	O	O	O
Scale printing	O	O	O	O
Different source for first page	O	X	O	X
Watermark	O	X	X	X
Overlay	O	X	X	X

Note

- Overlay is not supported in Windows NT 4.0.

System requirements

Before you begin, ensure that your system meets the following requirements:

Windows

OPERATING SYSTEM	REQUIREMENT (RECOMMENDED)		
	CPU	RAM	FREE HDD SPACE
Windows 2000	Pentium II 400 MHz (Pentium III 933 MHz)	64 MB (128 MB)	600 MB
Windows XP	Pentium III 933 MHz (Pentium IV 1 GHz)	128 MB (256 MB)	1.5GB
Windows Server 2003	Pentium III 933 MHz (Pentium IV 1 GHz)	128 MB (512 MB)	1.25 GB to 2 GB
Windows Server 2008	Pentium IV 1 GHz (Pentium IV 2 GHz)	512 MB (2048 MB)	10 GB
Windows Vista	Pentium IV 3 GHz	512 MB (1024 MB)	15 GB
Windows 7	Pentium IV 1 GHz 32-bit or 64-bit processor or higher	1 GB (2 GB)	16 GB
	• Support for DirectX 9 graphics with 128 MB memory(to enable the Aero theme). • DVD-R/W Drive		
Windows Server 2008 R2	Pentium IV 1 GHz(x86) or 1.4GHz(x64) processors(2GHz or faster)	512 MB (2048 MB)	10 GB

Note

- Internet Explorer 5.0 or higher is the minimum requirement for all Windows operating systems.
- Users who have an administrator right can install the software.

Linux

Item	Requirements
Operating system	• Red Hat 8.0 ~ 9.0 • Fedora Core 1 ~ 4 • Mandrake 9.2 ~ 10.1 • SuSE 8.2 ~ 9.2
Processor	Pentium IV 1 GHz or higher
RAM	256 MB or higher
Free disk page	1 GB or higher
Software	• Linux Kernel 2.4 or higher • Glibc 2.2 or higher • CUPS

Macintosh

OPERATING SYSTEM	REQUIREMENT (RECOMMENDED)		
	CPU	RAM	FREE HDD SPACE
Mac OS X 10.4 or lower	• Power PC G4/G5 • Intel processors	• 128 MB for a Power PC based Mac (512 MB) • 512 MB for an Intel based Mac (1 GB)	1 GB
Mac OS X 10.5	• 867MHz or faster Power PC G4 /G5 • Intel processors	512 MB (1 GB)	1 GB
Mac OS X 10.6	• Intel processors	1 GB (2 GB)	1 GB

4 Network setup

This chapter gives you step-by-step instructions for setting up your printer for network connections.

This chapter includes:

- **Introduction**
- **Supported operating systems**
- **Configuring TCP/IP**
- **Configuring IPX frame types**
- **Setting Ethernet speed**
- **Restoring the network configuration**
- **Printing a network configuration page**

Introduction

Once you have connected your printer to a network with an RJ-45 Ethernet cable, you can share the printer with other network users.

You need to set up the network protocols on the printer to use it as your network printer. Protocols can be set up by the following two methods:

Via network administration programs

You can configure your printer's print server settings and manage the printer via the following programs that came with your printer:

- **SyncThru™ Web Admin Service**: A web-based printer management solution for network administrators. **SyncThru™ Web Admin Service** provides you with an efficient way of managing network devices and lets you remotely monitor and troubleshoot network printers from any site with corporate intranet access.
- **SyncThru™ Web Service**: A web server embedded to your network print server, which allows you to configure the network parameters necessary for the printer to connect to various network environments.
- **SetIP**: A utility program allowing you to select a network interface and manually configure the addresses for use with the TCP/IP protocol.

For further details, refer to the user's guide on the network utilities CD that came with your printer.

Via the control panel

You can set up the following basic network parameters through the printer's control panel:

- Configure TCP/IP
- Configure IPX frame types for NetWare
- Configure EtherTalk

Supported operating systems

The following table shows the network environments supported by the printer:

Item	Requirements
Network interface	• 10/100 Base-TX
Network operating system	• Novell NetWare 4.x, 5.x, 6.x • Windows 2000/XP/2003/2008/Vista/7/ Server 2008 R2 • Various Linux OS • Macintosh OS 8.6 ~ 9.2 and 10.1 ~ 10.6
Network protocols	• NetWare IPX/SPX • TCP/IP • EtherTalk • HTTP 1.1 • SNMP
Dynamic addressing server	• DHCP, BOOTP

• IPX/SPX: Internet Packet eXchange/Sequenced Packet eXchange
• TCP/IP: Transmission Control Protocol/Internet Protocol
• DHCP: Dynamic Host Configuration Protocol
• BOOTP: Bootstrap Protocol

Configuring TCP/IP

Your printer can be set up with a variety of TCP/IP network information, such as an IP address, a subnet mask, a gateway, and DNS addresses. There are several ways in which your printer can be assigned a TCP/IP address, depending on your network.

- Static addressing: A TCP/IP address is assigned manually by the system administrator.
- Dynamic addressing via BOOTP/DHCP (default): A TCP/IP address is assigned automatically by the server.

Note
- Before configuring TCP/IP, you need to set the network protocol to TCP/IP.

Static addressing

To enter a TCP/IP address from your printer's control panel, take the following steps:

1. Press **Menu** until **Network** appears on the bottom line of the display and press **OK**.
2. Press **OK** when **TCP/IP** appears.
3. Press the **Scroll** buttons until **Static** appears and press **OK**.
4. Press **OK** when **IP Address** appears.

5 Set the first byte between 0 and 255 using the **Scroll** buttons and press **OK** to move to the next byte.

Repeat this to complete the address from the 1st byte to the 4th byte.

6 When you have finished, press **OK**.

7 Repeat step 5 and 6 to configure the other TCP/IP parameters: Subnet Mask and Gateway address.

8 Press **Stop** to return to Standby mode.

Dynamic addressing (BOOTP/DHCP)

To have a TCP/IP address assigned automatically by the server, take the following steps:

1 Press **Menu** until **Network** appears on the bottom line of the display and press **OK**.

2 Press **OK** when **TCP/IP** appears.

3 Press the **Scroll** buttons until **DHCP** or **BOOTP** appears and press **OK**.

4 Press **Stop** to return to Standby mode.

Configuring EtherTalk

EtherTalk is AppleTalk used in an Ethernet network. This protocol is widely used in Macintosh network environments. To use EtherTalk, take the following steps:

1 Press **Menu** until **Network** appears on the bottom line of the display and press **OK**.

2 Press the **Scroll** buttons until **EtherTalk** appears and press **OK**.

3 Press the **Scroll** buttons until **On** appears and press **OK**.

4 Press **Stop** to return to Standby mode.

Configuring IPX frame types

To use IPX/SPX protocol networks (for example, Novell NetWare), the format of the network communication frames must be specified for the printer. In most cases, you can keep the **Auto** setting. However, you can manually set the frame type format, if required. Take the following step to change the frame type format:

1 Press **Menu** until **Network** appears on the bottom line of the display and press **OK**.

2 Press the **Scroll** buttons until **NetWare** appears and press **OK**.

3 Press the **Scroll** buttons until the desired frame type appears.

- **Auto**: Automatically senses and limits the frame type to the first one detected.
- **802.2**: Limits the frame type to IPX over IEEE 802.2 with IEEE 802.3 frames. All others will be discarded.
- **802.3**: Limits the frame type to IPX over IEEE 802.3 frames. All others will be discarded.
- **Ethernet II**: Limits the frame type to IPX over Ethernet Frames. All others will be discarded.
- **SNAP**: Limits the frame type to IPX over SNAP with IEEE 802.3 frames. All others will be discarded.
- **Off**: Disables the IPX/SPX protocol.

4 Press **OK** to save the selection.

5 Press **Stop** to return to Standby mode.

Setting Ethernet speed

You can select the communication speed for Ethernet connections.

1 Press **Menu** until **Network** appears on the bottom line of the display and press **OK**.

2 Press the **Scroll** buttons until **Ethernet Speed** appears and press **OK**.

3 Press the **Scroll** buttons until the speed you want appears and press **OK**.

4 Press **Stop** to return to Standby mode.

Restoring the network configuration

You can return the network configuration to its default settings.

1 Press **Menu** until **Network** appears on the bottom line of the display and press **OK**.

2 Press the **Scroll** buttons until **Clear Setting** appears and press **OK**.

3 Press **OK** when **Yes** appears to restore the network configuration.

4 Power the printer off and back on.

Printing a network configuration page

The network configuration page shows how the network interface card on your printer is configured.

1 Press **Menu** until **Network** appears on the bottom line of the display and press **OK**.

2 Press the **Scroll** buttons until **Network Info** appears and press **OK**.

3 Press **OK** when **Yes** appears.

The network configuration page prints out.

5 Loading print media

This chapter will help you understand types of paper you can use with your printer and how to properly load paper in the different paper trays for the best print quality.

This chapter includes:

- **Selecting print media**
- **Loading paper**
- **Selecting an output location**

Selecting print media

You can print on a variety of print media, such as plain paper, envelopes, labels, and transparencies. Always use print media that meet the guidelines for use with your printer. Print media that does not meet the guidelines outlined in this user's guide may cause the following problems:

- Poor print quality
- Increased paper jams
- Premature wear on the printer

Properties, such as weight, composition, grain, and moisture content, are important factors that affect the printer's performance and the output quality. When you choose print media, consider the following:

- Desired outcome: The print media you choose should be appropriate for your project.
- Size: You can use any size media that fits easily within the paper adjusters of the paper tray.
- Weight: Your printer supports print media weights as follows:
  - 16 to 28 lb bond (60 to 105 g/m^2) for the tray 1 and optional tray 2, tray 3, tray 4
  - 16 to 43 lb bond (60 to 163 g/m^2) for the multi-purpose tray
  - 20 to 24 lb (75 to 90 g/m^2) for the duplex printing
- Brightness: Some print media are whiter than others and produce sharper, more vibrant images.
- Surface smoothness: The smoothness of the print media affects how crisp the printing looks on the paper.

Notes

- Some print media may meet all of the guidelines in this section and still not produce satisfactory results. This may be the result of improper handling, unacceptable temperature and humidity levels, or other variables over which Samsung has no control.
- Before purchasing large quantities of print media, ensure that it meets the requirements specified in this user's guide.

Caution

- Using print media that does not meet these specifications may cause problems, requiring repairs. Such repairs are not covered by Samsung's warranty or service agreements.

Supported sizes of paper

Type	Size	Dimensions	Weight[a]	Capacity[b]
Plain paper	Letter	216 x 279 mm (8.5 x 11 inches)	• 60 to 105 g/m^2 (16 to 28 lb bond) for the tray • 60 to 163 g/m^2 (16 to 43 lb bond) for the multi-purpose tray	• 500 sheets of 75 g/m^2 (20 lb bond) paper for the tray • 100 sheets for the multi-purpose tray
	Legal	216 x 356 mm (8.5 x 14 inches)		
	Folio	216 x 330.2 mm (8.5 x 13 inches)		
	Oficio	216 x 343 mm (8.5 x 13.5 inches)		
	A4	210 x 297 mm (8.27 x 11.69 inches)		
	JIS B5	182 x 257 mm (7.18 x 10.12 inches)		
	ISO B5	176 x 250 mm (6.93 x 9.84 inches)		
	Executive	184.2 x 266.7 mm (7.25 x 10.5 inches)		
	A5	148.5 x 210 mm (5.85 x 8.27 inches)		
	A6	105 x 148.5 mm (4.13 x 5.85 inches)		
Envelope	Envelope B5	176 x 250 mm (6.93 x 9.84 inches)	60 to 90 g/m^2 (16 to 24 lb)	10 sheets of 75 g/m^2 (20 lb) in the multi-purpose tray
	Envelope Monarch	98.4 x 190.5 mm (3.88 x 7.5 inches)		
	Envelope COM-10	105 x 241 mm (4.12 x 9.5 inches)		
	Envelope DL	110 x 220 mm (4.33 x 8.66 inches)		
	Envelope C5	162 x 229 mm (6.38 x 9.02 inches)		
	Envelope C6	114 x 162 mm (4.49 x 6.38 inches)		
Transparency	Letter, A4	Refer to the Plain paper section	138 to 146 g/m^2 (37 to 39 lb)	50 sheets of 75 g/m^2 (20 lb) in the multi-purpose tray
Labels	Letter, Legal, Folio, Oficio, A4, JIS B5, ISO B5, Executive, A5, A6	Refer to the Plain paper section	120 to 150 g/m^2 (32 to 40 lb)	25 sheets of 75 g/m^2 (20 lb) in the multi-purpose tray
Card stock	Letter, Legal, Folio, Oficio, A4, JIS B5, ISO B5, Executive, A5, A6	Refer to the Plain paper section	60 to 163 g/m^2 (16 to 43 lb)	10 sheets of 75 g/m^2 (20 lb) in the multi-purpose tray
Minimum size (custom)		76 x 127 mm (3 x 5 inches)	60 to 163 g/m^2 (16 to 43 lb)	Refer to the above Capacity sections
Maximum size (custom)		216 x 356 mm (8.5 x 14 inches)		

a. If media weight is over 28 lb (105 g/m^2), use the multi-purpose tray.
b. Maximum capacity may differ depending on media weight, thickness, and environmental conditions.

Print media for duplex printing

Type	Size	Weight
Plain paper	A4, Letter, Oficio, Legal, and Folio	75 ~ 90 g/m^2 (20 to 24 lb)

Guidelines for selecting and storing print media

When selecting or loading paper, envelopes, or other print media, keep these guidelines in mind:

- Always use print media that conform with the specifications listed on the next column.
- Attempting to print on damp, curled, wrinkled, or torn paper can cause paper jams and poor print quality.
- For the best print quality, use only high quality copier grade paper specifically recommended for use in laser printers.
- Avoid using the following media types:
  - Paper with embossed lettering, perforations, or a texture that is too smooth or too rough
  - Erasable bond paper
  - Multi-paged paper
  - Synthetic paper and thermally reactive paper
  - Carbonless paper and Tracing paper.
- Use of these types of paper could result in paper jams, chemical smells, and damage to your printer.
- Store print media in its ream wrapper until you are ready to use it. Place cartons on pallets or shelves, not on the floor. Do not place heavy objects on top of the paper, whether it is packaged or unpackaged. Keep it away from moisture or other conditions that can cause it to wrinkle or curl.
- Store unused print media at temperatures between 15° C and 30° C (59° F to 86° F). The relative humidity should be between 10% and 70%.
- Store unused print media in a moisture-proof wrap, such as a plastic container or bag, to prevent dust and moisture from contaminating your paper.
- Load special media types one sheet at a time through the multi-purpose tray to avoid paper jams.
- To prevent print media, such as transparencies and label sheets, from sticking together, remove them as they print out.

Guidelines for special print media

Media type	Guidelines
Envelopes	• Successful printing on envelopes depends upon the quality of the envelopes. When selecting envelopes, consider the following factors: - Weight: The weight of the envelope paper should not exceed 90 g/m^2 (24 lb) or jamming may occur. - Construction: Prior to printing, envelopes should lie flat with less than 6 mm (0.25 inches) curl, and should not contain air. - Condition: Envelopes should not be wrinkled, nicked, or otherwise damaged. - Temperature: You should use envelopes that are compatible with the heat and pressure of the printer during operation. • Use only well-constructed envelopes with sharp and well creased folds. • Do not use stamped envelopes. • Do not use envelopes with clasps, snaps, windows, coated lining, self-adhesive seals, or other synthetic materials. • Do not use damaged or poorly made envelopes. • Be sure the seam at both ends of the envelope extends all the way to the corner of the envelope. 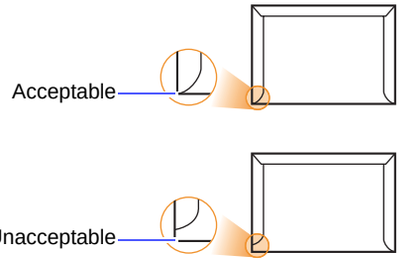 • Envelopes with a peel-off adhesive strip or with more than one flap that folds over to seal must use adhesives compatible with the printer's fusing temperature of 195° C (383° F) for 0.1 second. The extra flaps and strips might cause wrinkling, creasing, or jams, and may even damage the fuser. • For the best print quality, position margins no closer than 15 mm (0.6 inches) from the edges of the envelope. • Avoid printing over the area where the envelope's seams meet.

Media type	Guidelines
Transparencies	• To avoid damaging the printer, use only transparencies designed for use in laser printers. • Transparencies used in the printer must be able to withstand 195° C (383° F), the printer's fusing temperature. • Place them on a flat surface after removing them from the printer. • Do not leave them in the paper tray for long periods of time. Dust and dirt may accumulate on them, resulting in spotty printing. • To avoid smudging caused by fingerprints, handle them carefully. • To avoid fading, do not expose printed transparencies to prolonged sunlight. • Ensure that transparencies are not wrinkled, curled, or have any torn edges.
Labels	• To avoid damaging the printer, use only labels designed for use in laser printers. • When selecting labels, consider the following factors: - Adhesives: The adhesive material should be stable at 195° C (383° F), the printer's fusing temperature. - Arrangement: Only use labels with no exposed backing between them. Labels can peel off sheets that have spaces between the labels, causing serious jams. - Curl: Prior to printing, labels must lie flat with no more than 13 mm (5 inches) of curl in any direction. - Condition: Do not use labels with wrinkles, bubbles, or other indications of separation. • Make sure that there is no exposed adhesive material between labels. Exposed areas can cause labels to peel off during printing, which can cause paper jams. Exposed adhesive can also cause damage to printer components. • Do not run a sheet of labels through the printer more than once. The adhesive backing is designed for only a single pass through the printer. • Do not use labels that are separating from the backing sheet or are wrinkled, bubbled, or otherwise damaged.
Card stock or custom-sized materials	• Do not print on media smaller than 76 mm (3 inches) wide or 127 mm (5 inches) long. • In the software application, set margins at least 6.4 mm (0.25 inches) away from the edges of the material.

Media type	Guidelines
Preprinted paper	• Letterhead must be printed with heat-resistant ink that will not melt, vaporize, or release hazardous emissions when subjected to the printer's fusing temperature of 195° C (383° F) for 0.1 second. • Letterhead ink must be non-flammable and should not adversely affect printer rollers. • Forms and letterhead should be sealed in a moisture-proof wrapping to prevent changes during storage. • Before you load preprinted paper, such as forms and letterhead, verify that the ink on the paper is dry. During the fusing process, wet ink can come off preprinted paper, reducing print quality.

Loading paper

Load the print media you use for the majority of your print jobs in the tray 1. The tray 1 can hold a maximum of 500 sheets of 75 g/m^2 (20 lb) plain paper.

You can purchase optional trays and attach them below the standard tray to load an additional 500 sheets of paper for each tray. You can attach up to three additional trays. For order information for optional trays, see page 7.1.

The paper level indicator on the front of the tray 1 and the optional trays shows the amount of paper currently left in the tray. When the tray is empty, the indicator of the bar is completely lowered.

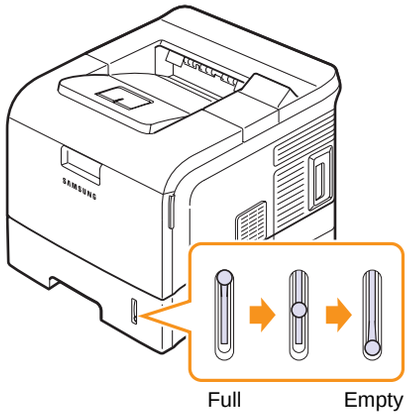

Using the standard tray or the optional trays

Load the print media you use for the majority of your print jobs in the standard tray. The standard tray can hold a maximum of 500 sheets of 75 g/m^2 (20 lb) paper.

To load paper, pull open the tray and load paper with the side to be printed on face down.

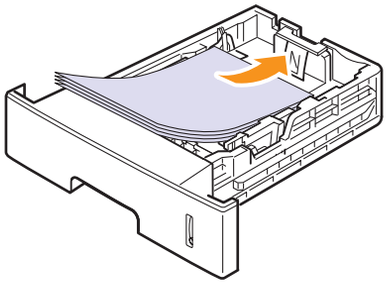

You can load letterhead paper with the design side face down. The top edge of the sheet with the logo should be placed at the front of the tray.

Notes

- If you experience problems with paper feed, place one sheet at a time in the multi-purpose tray.
- You can load previously printed paper. The printed side should be facing up with an uncurled edge at the front of the tray. If you experience problems with paper feed, turn the paper around. Note that the print quality is not guaranteed.

Changing the size of the paper in the tray

The tray is preset to Letter or A4 size, depending on your country. To change the size, you need to adjust the paper guides.

1 Push the back plate of the tray outwards completely so that it can extend the length of the tray.

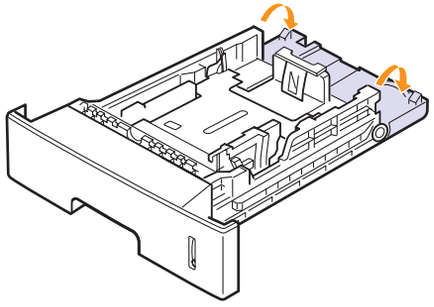

2 Squeeze the paper length guide and slide it to the correct position for the paper size you are loading, which is marked at the bottom of the tray.

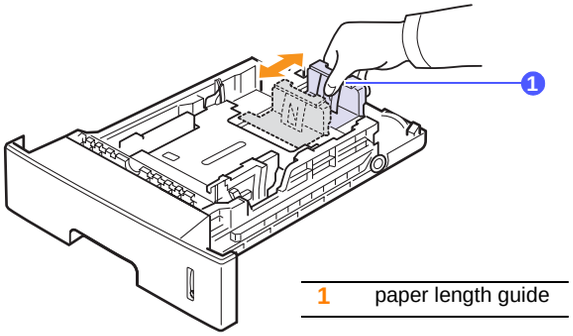

1	paper length guide

3 Squeeze the paper width guides and slide them to the desired paper size marked at the bottom of the tray.

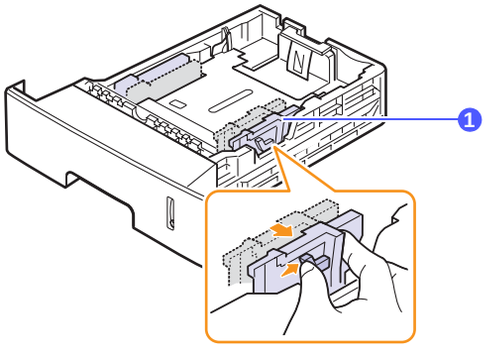

1	paper width guide

Notes

- Do not push the paper width guide far enough to cause the media to warp.
- If you do not adjust the paper width guide, it may cause paper jams.

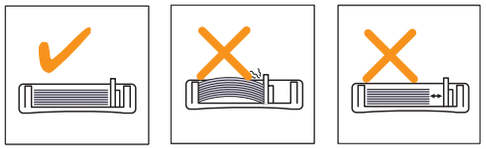

4 Load paper with the print side down.

Using the multi-purpose tray

The multi-purpose tray can hold special sizes and types of print media, such as transparencies, postcards, note cards, and envelopes. It is useful for single page printing on letterhead or colored paper.

To load paper in the multi-purpose tray:

1 Pull the multi-purpose tray down towards you and pull the multi-purpose tray extension to hold longer paper.

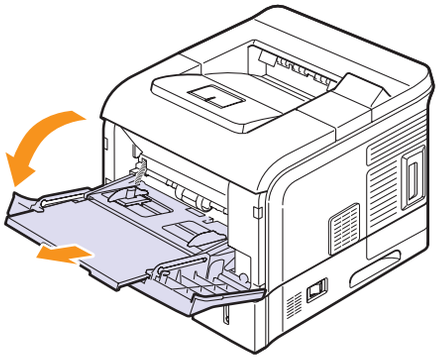

2 If you are using paper, flex or fan the edge of the paper stack to separate the pages before loading.

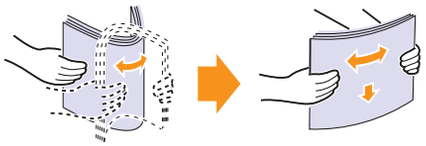

For transparencies, hold them by the edges and avoid touching the print side. Oils from your fingers can cause print quality problems.

3 Load the paper **with the side to be printed on facing up**.

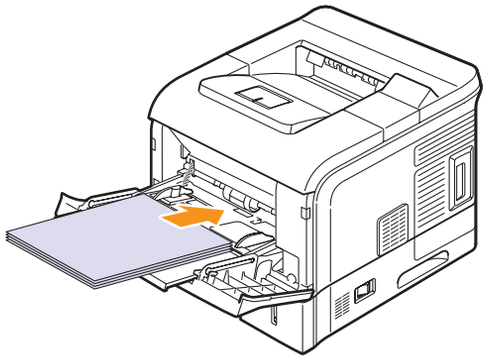

Depending on the media type you are using, keep the following loading guidelines:

- Envelopes: Flap side down and with the stamp area on the top left side.

Note

- To print on envelopes, you must open the rear cover and push the fuser levers upwards. The print quality will be enhanced.

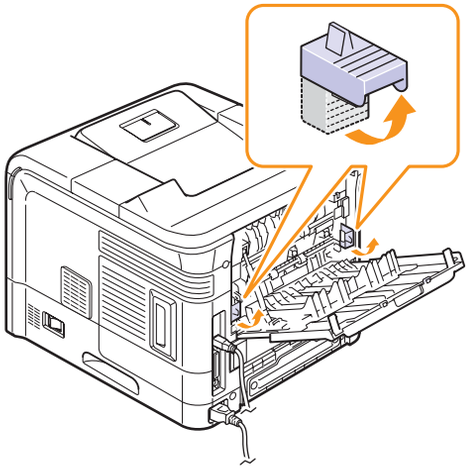

- Transparencies: Print side up and the top with the adhesive strip entering the printer first.
- Labels: Print side up and the top short edge entering the printer first.
- Preprinted paper: Design side up and the top edge entering the printer first.
- Card stock: Print side up and the short edge entering the printer first.
- Previously printed paper: Previously printed side down and an uncurled edge entering the printer first.

Note

- Make sure that you have not loaded too much print media. The print media buckles if you load a stack that is too deep or if you push it in too far.

Caution

- When you print on special media like envelopes, labels, transparencies, or cards, the output location should be the rear cover. Open the rear cover to use it. See page 5.8.

4 Squeeze the multi-purpose tray paper width guides and adjust them to the width of the paper. Do not force too much, or the paper will be bent, which will result in a paper jam or skew.

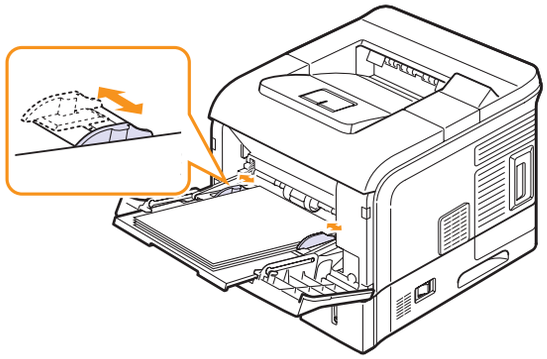

5 When you print a document, set the paper source and type in the software application. See the **Software Section**.

For information about setting the paper source and type on the control panel, see page 2.4.

6 After printing, put the multi-purpose tray extension back to its place and close the multi-purpose tray.

Tips on using the multi-purpose tray

- Load only one size of print media at a time in the multi-purpose tray.
- To prevent paper jams, do not add paper when there is still paper in the multi-purpose tray. This also applies to other tray.
- Print media should be loaded face up with the top edge going into the multi-purpose tray first and be placed in the center of the tray.
- Always load only the print media specified in page 5.2 to avoid paper jams and print quality problems.
- Flatten any curl on postcards, envelopes, and labels before loading them into the multi-purpose tray.
- When you print on 76 mm x 127 mm (3 x 5 inches) sized media on the multi-purpose tray, open the rear cover for straight paper path to avoid paper jams.
- When you print on transparencies, open the rear cover. If not they may tear while exiting the printer.

Using manual feed mode

You can manually load a sheet of print media in the multi-purpose tray if you select **Manual Feed** in the **Source** option from the **Paper** tab when you change print settings to print a document. See the **Software Section**. Manually loading paper can be helpful when you want to check the print quality after each page is printed.

This loading procedure is almost the same as the procedure for loading in the multi-purpose tray, except you load paper sheet-by-sheet in the tray, send print data to print the first page, and press **OK** on the control panel to print each following page.

1 Load the paper **with the side to be printed on facing up**.

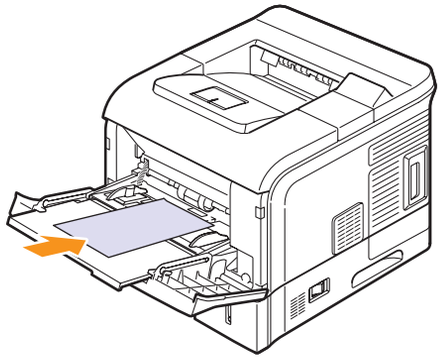

2 Squeeze the multi-purpose tray paper width guides and adjust them to the width of the paper. Do not force too much, or the paper will be bent, which will result in a paper jam or skew.

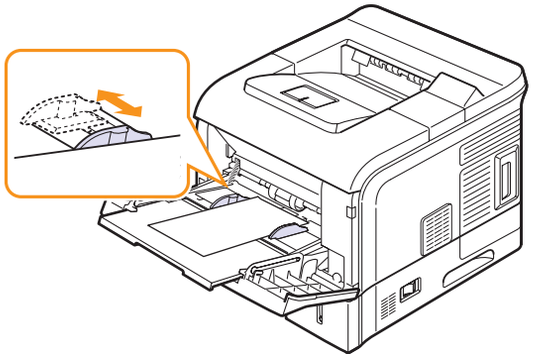

3 When you print a document, set the paper source to **Manual Feed** and select the appropriate paper size and type in the software application. See the **Software Section**.

4 Print a document.

The display shows a message prompting you to load paper and press **OK**.

5 Press **OK**.

The printer picks up the print media and prints. After one page is printed, the message appears again.

Note
- If you do not press the button, after a pause the printer will automatically pick the print media.

6 Insert the next sheet into the multi-purpose tray and press **OK**.

Repeat this step for every page to be printed.

Selecting an output location

The printer has two output locations; the rear cover (face up) and the output tray (face down).

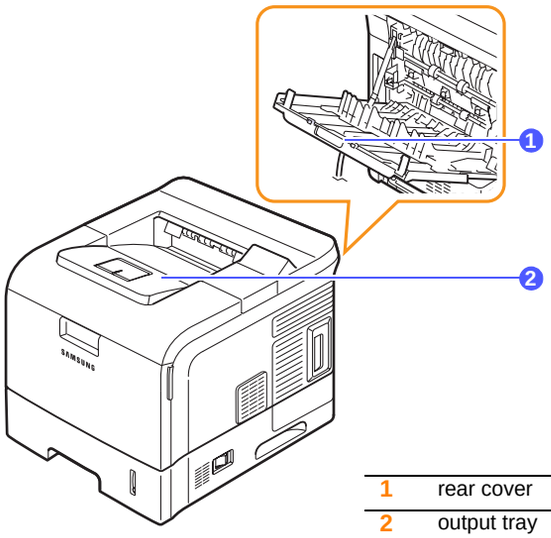

1	rear cover
2	output tray

The printer sends output to the output tray by default. To use the output tray, make sure that the rear cover is closed.

Notes

- If paper coming out of the output tray has problems, such as excessive curl, try printing to the rear cover.
- To avoid paper jams, do not open or close the rear cover while the printer is printing.

Printing to the output tray *(Face down)*

The output tray collects paper face down, in the order in which the sheets were printed. The tray should be used for most print jobs.

Printing to the rear cover *(Face up)*

Using the rear cover, paper comes out of the printer face up.

Printing from the multi-purpose tray to the rear cover provides a straight paper path. Using the rear cover might improve the output quality with special print media.

To use the rear cover, open it by pulling down and pull the rear cover extension.

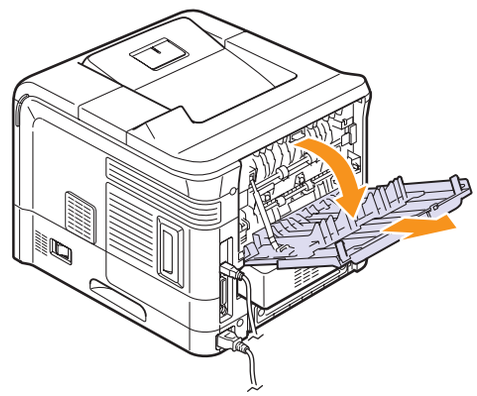

Caution

- The fuser area inside the rear cover of your printer becomes very hot when in use. Take care when you access this area.

6 Basic printing

This chapter explains common printing tasks.

This chapter includes:

- **Printing a document**
- **Canceling a print job**

Printing a document

This printer allows you to print from various Windows, Macintosh, or Linux applications. The exact steps for printing a document may vary depending on the application you use.

For details about printing, see the **Software Section**.

Canceling a print job

If the print job is waiting in a print queue or print spooler, such as the printer group in Windows, delete the job as follows:

1 Click the Windows **Start** button.

2 For Windows 2000, select **Settings** and then **Printers**.

For Windows XP/2003, select **Printers and Faxes**.

For Windows Vista/2008, select **Control Panel** > **Hardware and Sound** > **Printers**.

For Windows 7, select **Control Panel** > **Hardware and Sound** > **Devices and Printers**.

For Windows Server 2008 R2, select **Control Panel** > **Hardware** > **Devices and Printers**.

3 For Windows 2000, XP, 2003, 2008 and Vista, double-click your machine.

For Windows 7 and Windows Server 2008 R2, right click your printer icon > context menus > **See what' s printing**.

4 From the **Document** menu, select **Cancel**.

Note

- You can access this window simply by double-clicking the printer icon at the bottom right corner of the Windows desktop.

You can also cancel the current job by pressing **Stop** on the control panel of your printer.

7 Ordering supplies and accessories

This chapter provides information on purchasing toner cartridges and accessories available for your printer.

- **Toner cartridges**
- **Accessories**
- **How to purchase**

Toner cartridges

Type	Yield[a]	Part number
Standard yield	10,000 pages	ML-D4550A
High yield	20,000 pages	ML-D4550B

a. Declared yield value in accordance with ISO/IEC 19752.

Accessories

You can purchase and install accessories to enhance your printer's performance and capacity.

The following accessories are available for your printer:

Accessory	Description	Part number
Optional Tray	If you are experiencing frequent paper supply problems, you can attach additional 500 sheet trays up to three. You can print documents on various sizes and types of print media.	ML-S4550A
DIMM	Extends your printer's memory capacity.	• ML-MEM150: 128 MB • ML-MEM160: 256 MB
Ethernet 10/100 Base TX Wired Network Printer Interface Card	Allows you to connect your printer to a network environment using the wired network card.	ML-NWA20N
Duplex Unit	Allows you to print on both sides of the paper.	ML-3560U1
Hard Disk	Allows you to enhance the printer's capability and print in various ways.	ML-HDK210

How to purchase

To order Samsung-authorized supplies or accessories, contact your local Samsung dealer or the retailer where you purchased your printer, or visit www.samsungprinter.com and select your country/region for information on calling for technical support.

8 Maintenance

This chapter provides information for maintaining your printer and the toner cartridge, as well as suggestions for high-quality and economical printing.

This chapter includes:

- **Printing information pages**
- **Cleaning the printer**
- **Maintaining the toner cartridge**
- **Maintenance parts**

Printing information pages

From the printer's control panel, you can print pages that give detailed information about the printer. They can help you check your printer's status and maintain the printer.

1 Press **Menu** until **Information** appears on the bottom line of the display and press **OK**.

2 Press the **Scroll** buttons until the information page you want appears and press **OK**.

3 Press **OK** when **Yes** appears.

A page prints out.

Cleaning the printer

During the printing process, paper, toner, and dust particles can accumulate inside the printer. This buildup can cause print quality problems, such as toner specks or smearing. Your printer has a cleaning mode that can correct and prevent these types of problems.

Caution

- Cleaning the cabinet of the printer with cleaning materials containing large amounts of alcohol, solvents, or other strong substances can discolor or crack the cabinet.

Cleaning the outside of the printer

Clean the cabinet of the printer with a soft, lint-free cloth. You can dampen the cloth slightly with water, but be careful not to let any water drip onto or into the printer.

Cleaning the inside of the printer

There are two methods to clean the inside of the printer:

- Clean the inside manually.
- Print a cleaning sheet, which can be done from the control panel.

Cleaning the inside of the printer manually

1 Turn the printer off and unplug the power cord. Wait for the printer to cool down.

2 Open the top cover and pull the toner cartridge out. Set it on a clean flat surface.

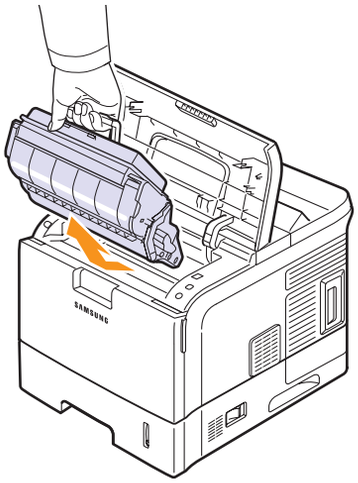

Caution

- To prevent damage to the toner cartridge, do not expose it to light for more than a few minutes. Cover it with a piece of paper, if necessary.
- Do not touch the green surface underside of the toner cartridge. Use the handle on the cartridge to avoid touching this area.

3 With a dry lint-free cloth, wipe away any dust and spilled toner from the toner cartridge area and the toner cartridge cavity.

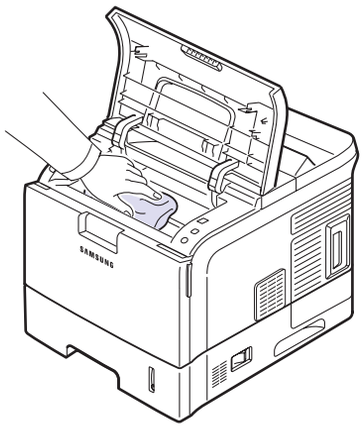

Caution

- While cleaning the inside of the printer, be careful not to touch the transfer roller, located underneath the toner cartridge. Oil from your fingers can cause print quality problems.

4 Gently swab the long strip of glass (LSU) inside the top of the cartridge cavity and check for dirt or dust.

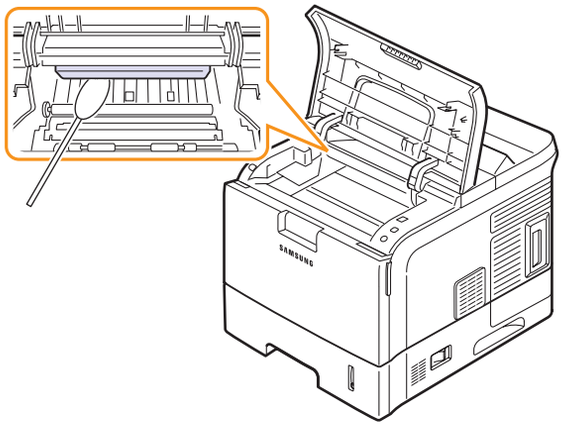

Note

- The long strip of glass is hard to locate.

5 Locate the PTL lens by flipping up the guide feed and gently swab the lens with the pointed white cotton.

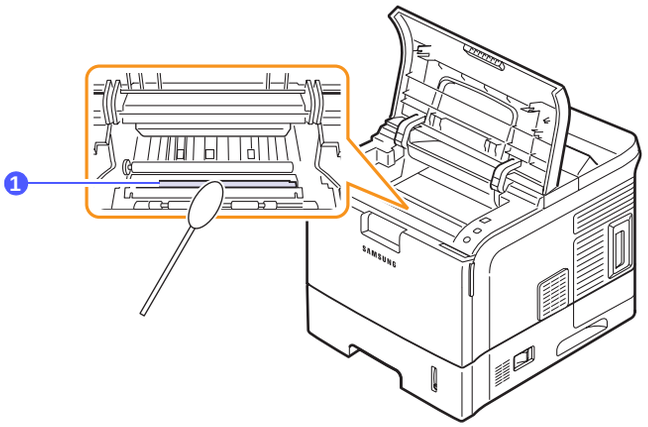

1	PTL lens

6 Clean a feed sensor with a cotton bud.

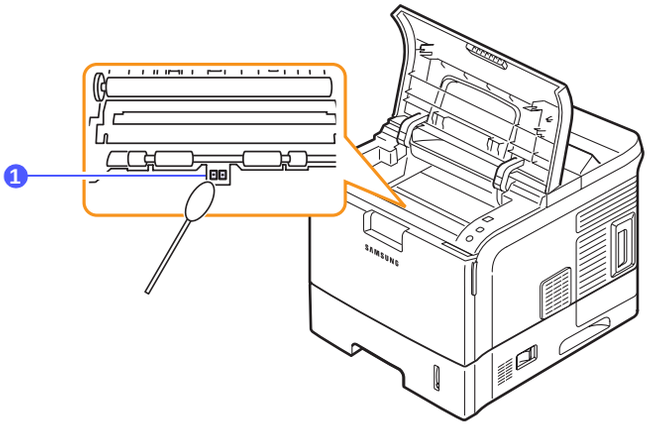

1	Feed Sensor

7 Reinsert the toner cartridge and close the top cover.

8 Plug in the power cord and turn the printer on.

Printing a cleaning sheet

If you are experiencing blurred, faded, or smeared printouts, you can clear the problem by printing a cleaning sheet, provided by your printer. You can print:

- OPC cleaning sheet: cleans the OPC drum of the toner cartridge.
- Fuser cleaning sheet: cleans the fuser unit inside the printer.

This process will produce a page with toner debris, which should be discarded.

1 Make sure that the printer is turned on with paper loaded in the tray.

2 Press **Menu** until **System Setup** appears on the bottom line of the display and press **OK**.

3 Press the **Scroll** buttons until **Maintenance** appears and press **OK**.

4 Press the **Scroll** buttons until **Clean Fuser** or **Clean Drum** appears and press **OK**.

Your printer automatically picks up a sheet of paper from the tray and prints out a cleaning sheet with dust or toner particles on it.

Maintaining the toner cartridge

Toner cartridge storage

Toner cartridges contain components that are sensitive to light, temperature, and humidity. Samsung suggests users follow the recommendations to ensure the optimum performance, highest quality, and longest life from your new Samsung toner cartridge.

Store this cartridge in the same environment as the printer it will be used in; this should be in controlled office temperature and humidity conditions. The toner cartridge should remain in its original, unopened package until installation – If original packaging is not available, cover the top opening of the cartridge with paper and store in a dark cabinet.

Opening the cartridge package prior to use dramatically shortens its useful shelf and operating life. Do not store on the floor. If the toner cartridge is removed from the printer, always store the cartridge:

- Inside the protective bag from the original package
- Correct side up in a horizontal position (not standing on end)
- Do not store consumables in;
  - Temperature greater than 40°C (104°F).
  - Humidity range less than 20% and not greater than 80%.
  - An environment with extreme changes in humidity or temperature.
  - Direct sunlight or room light.
  - Dusty places.
  - A car for a long period of time.
  - An environment where corrosive gases are present.
  - An environment with salty air.

Handling instructions

- Do not touch the surface of the photosensitive drum in the cartridge.
- Do not expose the cartridge to unnecessary vibrations or shock.
- Never manually rotate the drum, especially in the reverse direction; this can cause internal damage and toner spillage.

Use of non-Samsung and refilled toner cartridge

Samsung Electronics does not recommend or approve the use of non-Samsung brand toner cartridges in your printer including generic, store brand, refilled, or remanufactured toner cartridges.

Caution

- Samsung's printer warranty does not cover damage to the machine caused by the use of a refilled, remanufactured, or non-Samsung brand toner cartridge.

Estimated cartridge life

Estimated cartridge life (the life of the toner cartridge yield) depends on the amount of toner that print jobs require. The actual print-out number may vary depending on the print density of the pages you print on, operating environment, printing interval, media type, and/or media size. For example, if you print a lot of graphics, the consumption of the toner is high and you may need to change the cartridge more often.

Saving toner

To save toner, press **Toner Save** on the control panel. The button backlight turns on.

Using this feature extends the life of the toner cartridge and reduce your cost per page, but it also reduces print quality.

Checking the remaining toner

You can check the level of toner left in the cartridge.

If you are having print quality problems, this can help you determine if the problem is caused by low toner.

1 Press **Menu** until **System Setup** appears on the bottom line of the display and press **OK**.

2 Press the **Scroll** buttons until **Maintenance** appears and press **OK**.

3 Press the **Scroll** buttons until **Supplies Life** appears and press **OK**.

4 Press the **Scroll** buttons until **Toner Remains** appears and press **OK**.

The display shows the percentage of the remaining toner.

Note

While the following messages are appearing on the display, the sub-menu(s) under **Supplies Life** can be changed:

– **Invalid Toner**, **NonGenuine Toner**, **Replace Toner**, **Toner Exhausted**

Redistributing toner cartridge

When the toner cartridge is near the end of its life:

- White streaks and light printing occur.
- **Toner Low** appears on the display.
- The **Status** LED blinks red.

If this happens, you can temporarily reestablish print quality by redistributing the remaining toner in the cartridge. In some cases, white streaks or light printing will still occur even after you have redistributed the toner.

1 Open the top cover.

2 Pull the toner cartridge out.

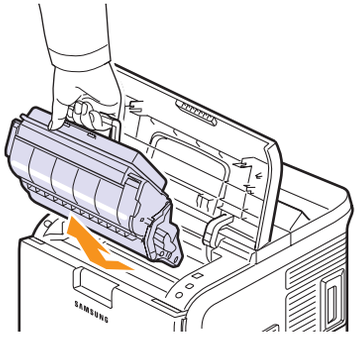

Caution

- Avoid reaching too far into the printer. The fusing area may be hot.
- To prevent damage to the toner cartridge, do not expose it to light for more than a few minutes. Cover it with a piece of paper, if necessary.
- Do not touch the green surface underside of the toner cartridge. Use the handle on the cartridge to avoid touching this area.

3 Thoroughly shake the cartridge 5 or 6 times to distribute the toner evenly inside the cartridge.

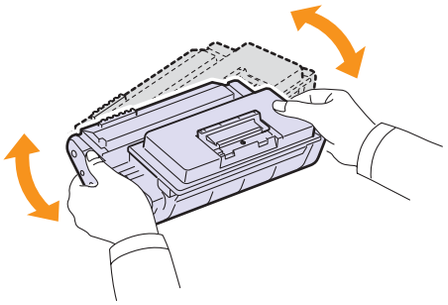

Note

- If toner gets on your clothing, wipe it off with a dry cloth and wash clothing in cold water. Hot water sets toner into fabric.

4 Hold the toner cartridge by the handle and slowly insert the cartridge into the opening in the printer.

Tabs on the sides of the cartridge and corresponding grooves within the printer will guide the cartridge into the correct position until it locks into place completely.

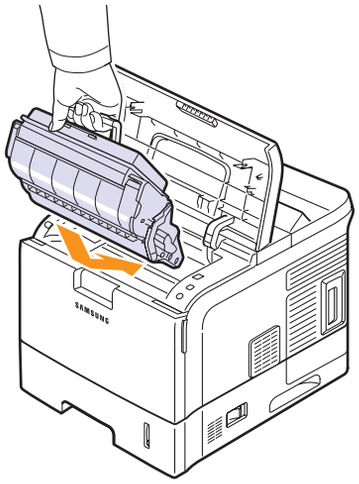

5 Close the top cover. Make sure that the cover is securely closed.

Replacing the toner cartridge

- **Toner Empty** appears on the display.
- The **Status** LED lights red.

At this stage, the toner cartridge needs to be replaced. For order information for toner cartridges, see page 7.1.

1 Open the top cover.

2 Pull the toner cartridge out.

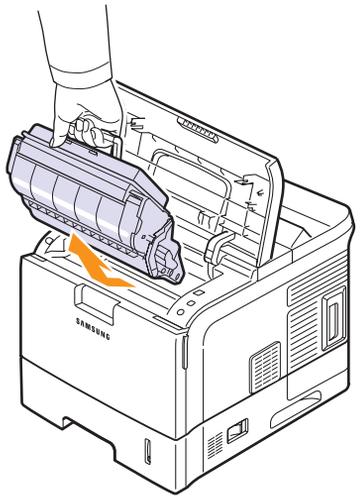

3 Remove the new toner cartridge from its bag.

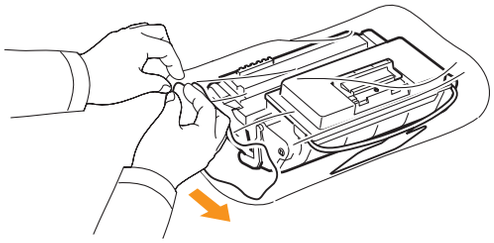

Caution

- Do not use sharp objects, such as a knife or scissors, to open the toner cartridge package. They might scratch the drum of the cartridge.

4 Locate the sealing tape at the end of the toner cartridge. Carefully pull the tape completely out of the cartridge and discard it.

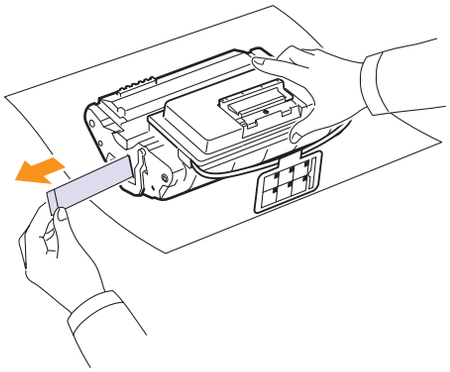

Note

- The sealing tape should be longer than 60 cm when correctly removed.
- Holding the toner cartridge, pull the sealing tape straight to remove it form the cartridge. Be careful not to cut the tape. If this happens, you cannot use the toner cartridge.
- Refer to the helpful pictures on the cartridge wrapping paper.

5 Remove the flexible plastic holder out of the toner cartridge.

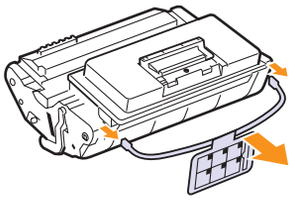

6 Thoroughly shake the cartridge 5 or 6 times to distribute the toner evenly inside the cartridge.

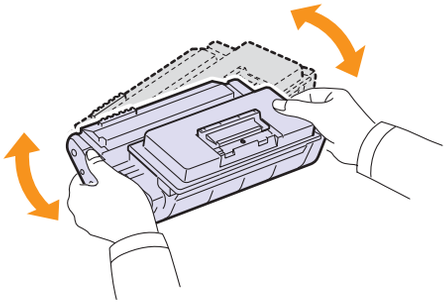

Thoroughly roll the cartridge to assure maximum copies per cartridge. Save the box and the plastic bag for shipping.

Caution

- If toner gets on your clothing, wipe it off with a dry cloth and wash clothing in cold water. Hot water sets toner into fabric.
- To prevent damage to the toner cartridge, do not expose it to light for more than a few minutes. Cover it with a piece of paper, if necessary.
- Do not touch the green surface underside of the toner cartridge. Use the handle on the cartridge to avoid touching this area.

7 Hold the toner cartridge by the handle and slowly insert the cartridge into the opening in the printer.

Tabs on the sides of the cartridge and corresponding grooves within the printer will guide the cartridge into the correct position until it locks into place completely.

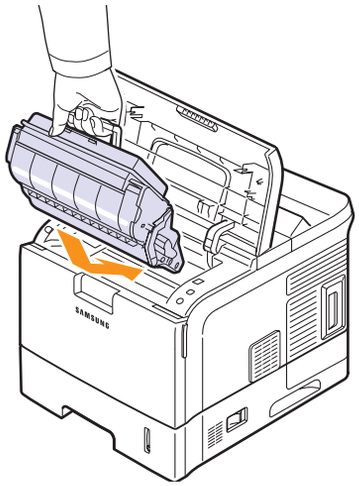

8 Close the top cover. Make sure that the cover is securely closed.

Clearing the Toner Low Replace Toner message

When the **Toner Low Replace Toner** message appears you can configure not to see this message again not to disturb you.

1 Press **Menu** until **System Setup** appears on the bottom line of the display and press **OK**.

2 Press the Scroll buttons until **Maintenance** appears and press **OK**.

3 Press the Scroll buttons until **CLR Empty Msg.** appears and press **OK**.

4 Select **On** and press **OK**.

5 Now the **Toner Low Replace Toner** message does not appear but the **Replace Toner** message will remain for reminding you that the new cartridge needs to be installed for quality.

Caution

•Once you have selected **On**, this setting will be permanently written to the memory of the toner cartridge, and this menu will be disappeared from the **Maintenance** menu.

Maintenance parts

To avoid print quality and paper feed problems resulting from worn parts and to maintain your printer in top working condition, the following items will need to be replaced when the specified number of pages have been printed or when the life span of each item has expired.

Items	Yield (Average)
Transfer roller	150,000
Fuser unit	150,000
Paper feeding roller	150,000
Rubber pad	150,000

Samsung highly recommends that an authorized service provider, dealer or the retailer where you bought printer performs this maintenance activity.

9 Troubleshooting

This chapter provides helpful information for what to do if you encounter an error while using your printer.

This chapter includes:

- **Clearing paper jams**
- **Troubleshooting checklist**
- **Understanding the status LED**
- **Understanding display messages**
- **Toner cartridge-related messages**
- **Solving general printing problems**
- **Solving print quality problems**
- **Common Windows problems**
- **Common Macintosh problems**
- **Common PostScript problems**
- **Common Linux problems**

Clearing paper jams

Note

- When removing paper that is jammed in the printer, if possible always pull the paper in the direction that it normally moves so as not to damage internal components. Always pull firmly and evenly; do not jerk the paper. If the paper tears, ensure that all fragments of paper are removed; otherwise a jam will occur again.

When a paper jam occurs, the **Status** LED lights red. Open and close the top cover. The jammed paper automatically exits the printer.

If the paper does not exit, check the display on the control panel. The message indicating the corresponding location of the paper jam appears. Refer to the table below to locate the paper jam and to clear it:

Message	Location of Jam	Go To
Paper Jam 0 **Open/Close Door**	In the paper feed area (tray 1, optional tray 2, optional tray 3, optional tray 4, multi-purpose tray)	the next column
Paper Jam 1 **Open/Close Door**	Around the toner cartridge	page 9.3
Paper Jam 2 **Check Inside**	In the paper exit area	page 9.4
Paper Exit Jam 1 **Open/Close Door**	Between the toner cartridge and the paper exit area	page 9.3
Paper Tray 2 Jam **Open Tray 2**	In the optional tray 2	page 9.2
Paper Tray 3 Jam **Open Tray 3**	In the optional tray 3	page 9.2
Paper Tray 4 Jam **Open Tray 4**	In the optional tray 4	page 9.2
Duplex Jam 0[a] **Check Inside**	In the duplex area	page 9.4
Duplex Jam 1[a] **Open/Close Door**	In the duplex area	page 9.5

a. Available with the optional duplex unit in the ML-4550 and ML-4551N.

In the paper feed area

In the tray 1

1 Pull the tray 1 open.

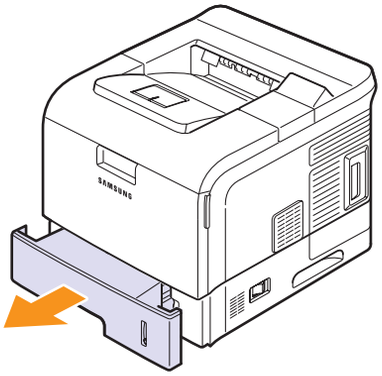

2 Remove the jammed paper by gently pulling it straight out. Make sure that all of the paper is properly aligned in the tray 1.

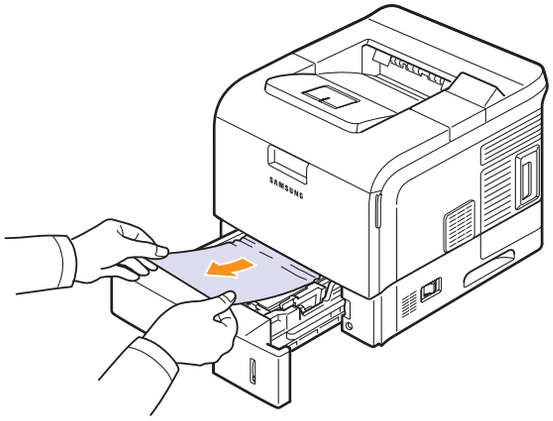

If the paper does not move when you pull, or if you do not see the paper in this area, check the fuser area around the toner cartridge. See page 9.3.

3 Insert the tray 1 into the printer until it snaps into place. Printing automatically resumes.

In the optional tray

1 Pull the optional tray open.

2 Remove the jammed paper from the printer.

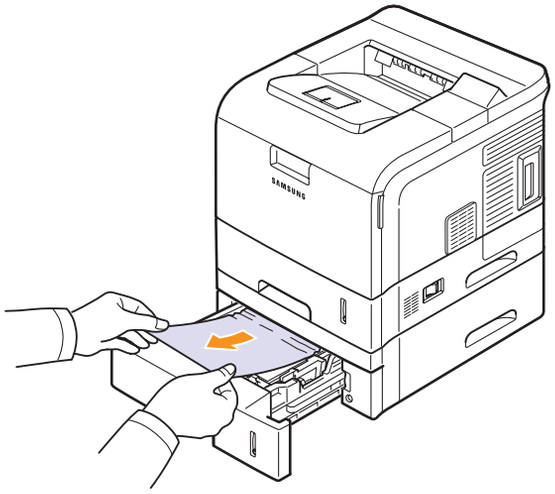

If the paper does not move when you pull, or if you do not see the paper in this area, stop and go to step 3.

3 Pull the upper tray half way out.

4 Pull the jammed paper straight up and out.

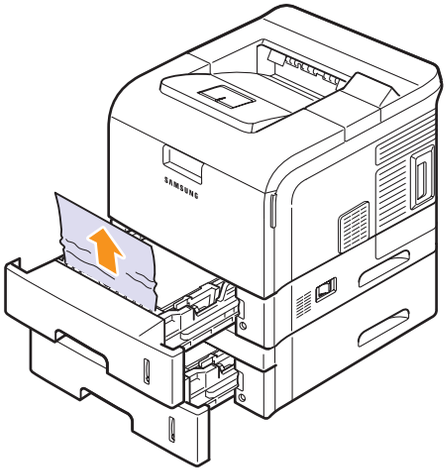

5 Fully insert the trays back into the printer. Printing automatically resumes.

In the multi-purpose tray

1 If the paper is not feeding properly, pull the paper out of the printer.

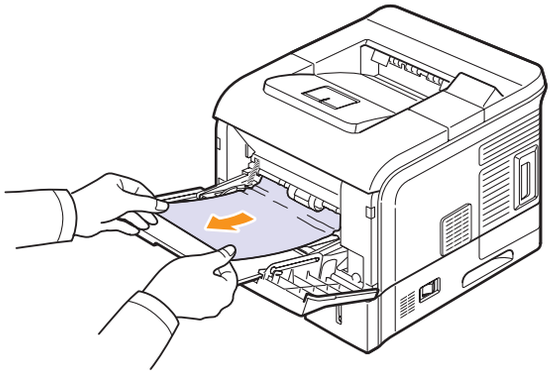

2 Open and close the top cover to resume printing.

Around the toner cartridge

Note

- The fuser area is hot. Take care when removing paper from the printer.

1 Open the top cover and pull the toner cartridge out.

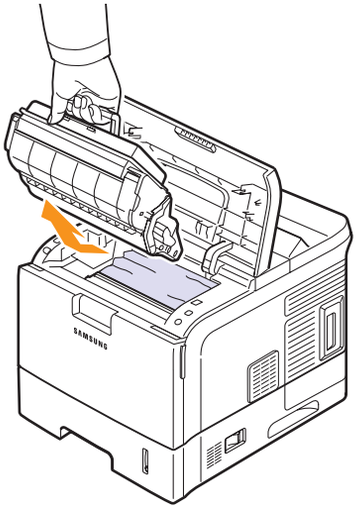

Caution

- To prevent damage to the toner cartridge, do not expose it to light for more than a few minutes. Cover it with a piece of paper, if necessary.
- Do not touch the green surface underside of the toner cartridge. Use the handle on the cartridge to avoid touching this area.

2 Carefully lift up the guide feed.

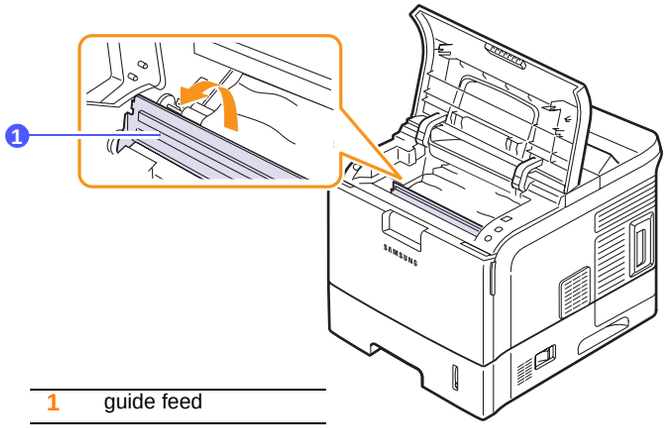

1 guide feed

3 Remove the jammed paper by gently pulling it straight out.

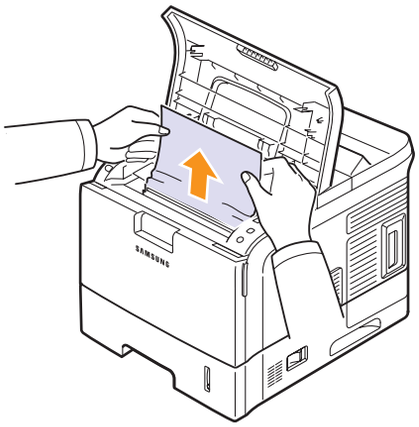

If you do not see the jammed paper or if there is any resistance removing the paper, stop pulling and go to the paper exit area. See page 9.4.

4 Flip down the guide feed.

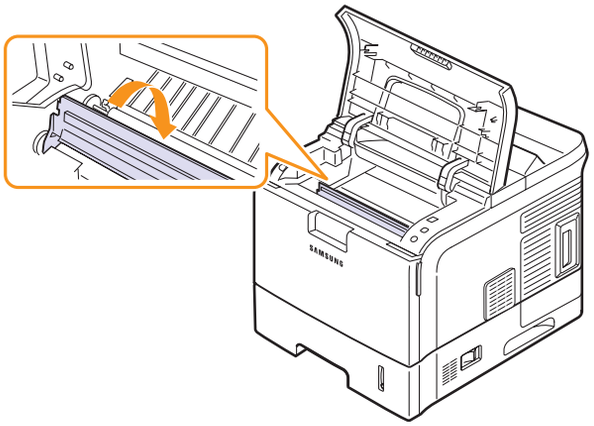

5 Replace the toner cartridge and close the top cover. Printing automatically resumes.

Note

- If it is difficult to reinstall the toner cartridge, make sure that the guide feed has been flipped back down into position.

In the paper exit area

1 Open and close the top cover. The jammed paper is automatically ejected from the printer.

2 Gently pull the paper out of the output tray.

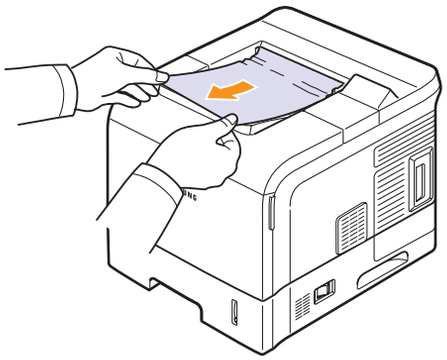

If you do not see the jammed paper or if there is any resistance when you pull, stop and go to the next step.

3 Open the rear cover.

4 By pusing the fuser levers upwards, loosen the jammed paper. Then gently pull the paper straight out.

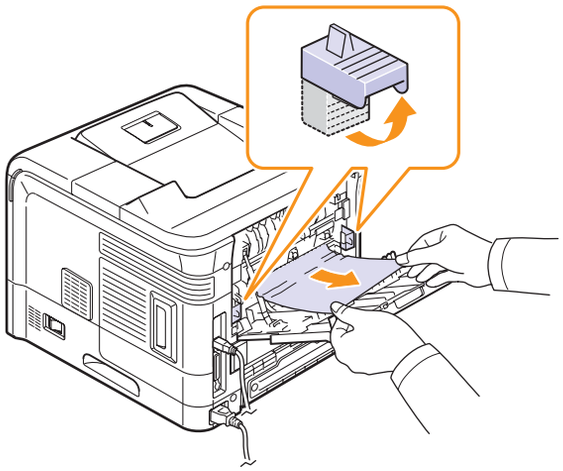

5 Put the fuser levers to their original position and close the rear cover. Printing automatically resumes.

In the duplex unit area

If the duplex unit is not inserted correctly, paper jam may occur. Make sure that the duplex unit is inserted correctly.

In the ML-4550 and ML-4551N, the optional duplex unit should be installed.

Duplex jam 0

1 Pull the duplex unit out of the printer.

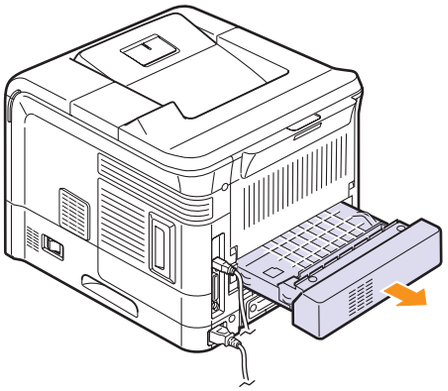

2 Locate the jammed paper and remove it.

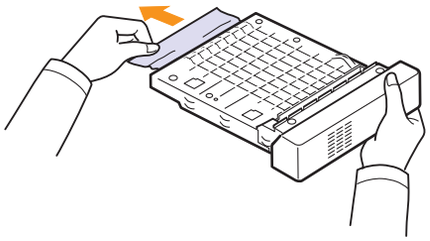

3 Insert the duplex unit into the slot.

4 Open and close the top cover. The printer will resume printing.

Duplex jam 1

1 Open the rear cover.

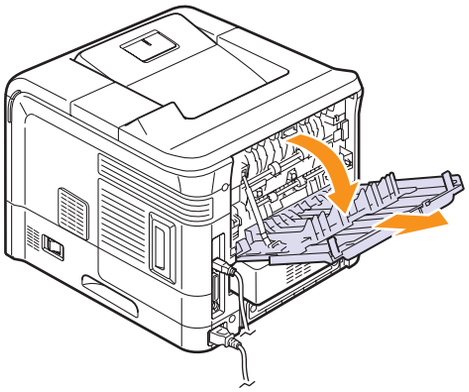

2 Gently pull the jammed paper straight up.

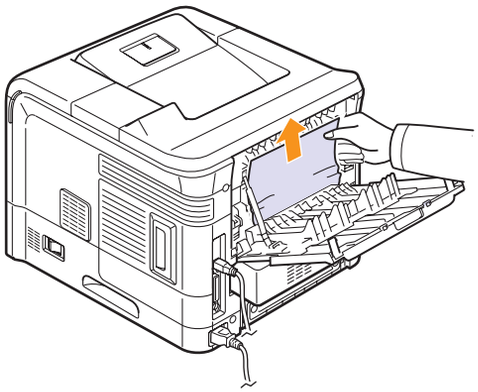

3 Close the rear cover.

4 Open and close the top cover. The printer will resume printing.

Tips for avoiding paper jams

By selecting the correct media types, most paper jams can be avoided. When a paper jam occurs, follow the steps outlined on page 9.1.

- Follow the procedures on page 5.5. Ensure that the adjustable guides are positioned correctly.
- Do not overload the tray. Ensure that the paper level is below the paper capacity mark on the inside wall of the tray.
- Do not remove paper from the tray while your printer is printing.
- Flex, fan, and straighten paper before loading.
- Do not use creased, damp, or highly curled paper.
- Do not mix paper types in a tray.
- Use only recommended print media. See page 5.1.
- Ensure that the recommended print side of print media is facing down in the tray, or facing up in the multi-purpose tray.

Troubleshooting checklist

If the printer is not working properly, consult the following checklist. If the printer does not pass a step, follow the corresponding suggested solutions.

Condition	Suggested solutions
Make sure that the **Status** LED on the control panel lights green and **Ready** is shown on the display.	• If the **Status** LED is off, check the power cord connection. Check the power switch. Check the power source by plugging the power cord into another outlet. • If the **Status** LED lights red, check the display message. See page 9.6.
Print a demo page to verify that the printer is feeding paper correctly. See page 2.8.	• If a demo page does not print, check the paper supply in the tray. • If the paper jams in the printer, see page 9.1. • If an error message appears on the display, see page 9.6.
Check the demo page to see if it printed correctly.	If there is a print quality problem, see page 9.11.
Print a short document from a software application to verify that the computer and printer are connected and are communicating correctly.	• If the page does not print, check the cable connection between the printer and the computer. • Check the print queue or print spooler to see if the printer has been paused. • Check the software application to ensure that you are using the proper printer driver and communication port. If the page is interrupted during printing, see page 9.9.
If completing the checklist does not resolve the printer problem, check the following troubleshooting sections.	• “Understanding the status LED” on page 9.6. • “Understanding display messages” on page 9.6. • “Solving general printing problems” on page 9.9. • “Common Windows problems” on page 9.13. • “Common PostScript problems” on page 9.13. • “Common Linux problems” on page 9.14. • “Common Macintosh problems” on page 9.14.

Understanding the status LED

Status		Description
Off		• The printer is off-line and cannot print. • The printer is in power save mode. When data is received, it switches to on-line automatically.
Green	On	The printer is on-line and can receive data from the computer.
	Blinking	• When the backlight blinks slowly, the printer is receiving data from the computer. • When the backlight blinks quickly, the printer is printing data.
Red	On	• A paper jam has occurred. To solve the problem, see page 9.1. • The top cover is open. Close the top cover. • There is no paper in the tray. Load paper in the tray. • The toner cartridge installed is not a genuine cartridge, and you selected **Stop** at the **NonGenuine Toner** prompt. See page 9.6. • The lifespan of the toner cartridge is reached, and you selected **Stop** at the **Toner Exhausted** prompt. See page 9.6. • The printer has stopped printing due to a major error. Check the display message. See page 9.6 for details on the meaning of the error message.
	Blinking	• A minor error is occurring and the printer is waiting for the error to be cleared. Check the display message. When the problem is cleared, the printer resumes printing. • The toner cartridge is low. Order a new toner cartridge. You can temporarily improve print quality by redistributing the toner. See page 8.4.

Understanding display messages

Messages appear on the Smart Panel program window or the control panel display to indicate the printer's status or errors. Refer to the tables below to understand the messages' meaning and correct the problem if necessary. Messages and their meanings are listed in alphabetical order.

Note

- When you call for service, it is very convenient to tell the service representative the display message.

Message	Meaning	Suggested solutions
ADC Not Confirm Error	There is a problem in your printer system.	Unplug the power cord and plug it back in. If the problem persists, please call for service.
Door Open	The top cover or rear cover is not securely latched.	Close the cover until it locks into place.
Duplex Jam 0 Check Inside	Paper has jammed during duplex printing.	Clear the jam. See page 9.4.
Duplex Jam 1 Open/Close Door	Paper has jammed during duplex printing.	Clear the jam. See page 9.5.
Fuser Door Open	The fuser door is not securely latched.	Open the rear cover and close the fuser door until it locks into place.
Fuser is Cleaning	Your printer is printing a Cleaning sheet now.	Please wait a few minutes.
Inner Temp. Open Cycle Power	There is a problem in your printer system.	Unplug the power cord and plug it back in. If the problem persists, please call for service.
Inner Temp. Error Cycle Power	There is a problem in your printer system.	Unplug the power cord and plug it back in. If the problem persists, please call for service.

Message	Meaning	Suggested solutions
Load [Size] In [Tray]	The paper size specified in the printer properties does not match the paper you are loading.	Load the correct paper in the tray.
Load Manual Press Cont Key	The multi-purpose tray is empty in manual feed mode.	Load a sheet of print media and press **OK**. You need to press **OK** each page to be printed.
Low Heat Error Cycle Power	There is a problem in the fuser unit.	Unplug the power cord and plug it back in. If the problem persists, please call for service.
LSU Motor Error Cycle Power	A problem has occurred in the LSU (Laser Scanning Unit).	Unplug the power cord and plug it back in. If the problem persists, please call for service.
MP Tray Paper Empty	There is no paper in the multi-purpose tray.	Load paper in the multi-purpose tray. See page 5.6.
OPC is Cleaning	Your printer is printing a cleaning sheet now.	Please wait a few minutes.
Open Heat Error Cycle Power	There is a problem in the fuser unit.	Unplug the power cord and plug it back in. If the problem persists, please call for service.
Out-Bin Full	The output tray is full.	It can hold up to 250 sheets of plain paper. Once the paper is removed from the output tray, the printer resumes printing.
Over Heat Error Cycle Power	There is a problem in the fuser unit.	Unplug the power cord and plug it back in. If the problem persists, please call for service.
Paper Exit Jam 1 Open/Close Door	Paper has jammed before reaching to the exit sensor.	Clear the jam. See page 9.3.

Message	Meaning	Suggested solutions
Paper Jam 0 Open/Close Door	Paper has jammed in the feeding area of the tray.	Clear the jam. See page 9.2.
Paper Jam 1 Open/Close Door	Paper has jammed in the fuser area. There are toner powders on a feed sensor.	Clear the jam. See page 9.3. Clean a feed sensor. see page 8.1.
Paper Jam 2 Check Inside	Paper has jammed in the paper exit area.	Clear the jam. See page 9.4.
Paper [Tray] Jam Open [Tray]	Paper has jammed in the displayed optional tray.	Clear the jam. See page 9.2.
Printing...	The printer is printing jobs.	Complete your printing.
Ready	The printer is on-line and ready to print.	Use your printer.
Self Diagnostic LSU	The LSU (Laser Scanning Unit) in your printer is checking some problems detected.	Please wait a few minutes.
Self Diagnostic Temperature	The engine in your printer is checking some problems detected.	Please wait a few minutes.
Sleeping...	The printer is in power save mode.	When data is received, it switches to on-line automatically.
[Tray] Cassette Out	The displayed tray is open.	Close the tray until it locks into place.
[Tray] Paper Empty	There is no paper in the tray.	Load paper in the tray. See page 5.5.
Warming Up Please Wait...	Your printer is warming up now.	Please wait a few minutes.

Toner cartridge-related messages

Message	Meaning	Suggested solutions
Install Toner	A toner cartridge is not installed.	Install a **toner cartridge**.
Invalid Toner	The **toner cartridge** you have installed is not for your printer.	Install a **Samsung**-genuine **toner cartridge**, designed for your printer.
Toner Low	Small amount of toner is left in the cartridge. The estimated cartridge life[a] of toner is close.	Prepare a new cartridge for replacement. You may temporarily increase the printing quality by redistributing the toner.(See page 8.4.)
NonGenuine Toner ◄ **Stop** ►	The toner cartridge installed is not a genuine cartridge.	You can select either **Stop** or **Continue**. If you do not select any, the printer will work as **Stop** is selected. If you select **Stop**, you cannot print until the genuine cartridge is installed. However, you can still print any kind of reports. If you select **Continue**, you can keep printing but the quality cannot be guaranteed, and the product support is no longer provided. If you want to change the selection, turn the printer off and on to have this message appear again, and then re-select **Stop** or **Continue**.
NonGenuine Toner **Replace Toner1**	The toner cartridge installed is not a genuine cartridge.	This message appears when you selected **Stop** at the **NonGenuine Toner** prompt. Install the genuine **toner cartridge**.
NonGenuine Toner **Replace Toner**	The toner cartridge installed is not a genuine cartridge.	This message appears when you selected **Continue** at the **NonGenuine Toner** prompt. Install the genuine **toner cartridge**.
Toner Low **Replace Toner**	A toner cartridge has almost reached its estimated cartridge life.	Replace the toner cartridge for the best print quality when this message appears. Using a cartridge beyond this stage can result in printing quality issues. (See page 8.5.) **Caution** •Samsung does not recommend using non-genuine Samsung toner cartridge such as refilled or remanufactured. Samsung cannot guarantee non-genuine Samsung toner cartridge's quality. Service or repair required as a result of using non-genuine Samsung toner cartridges will not be covered under the machine warranty. You can configure not to see the **Toner Low Replace Toner** message. (See page 8.4.)
Replace Toner	A toner cartridge has almost reached its estimated cartridge life.	This message appears when you turned off the **Toner Low Replace Toner** message. See page 8.4. Replace the toner cartridge for the best print quality when this message appears. Using a cartridge beyond this stage can result in printing quality issues.
Toner Exhausted ◄ **Stop** ►	The lifespan of the toner cartridge is reached.	You can select either **Stop** or **Continue**. If you do not select any, the printer will work as **Stop** is selected. If you select **Stop**, you cannot print until the genuine cartridge is installed. If you select **Continue**, you can keep printing but the quality cannot be guaranteed, and the product support is no longer provided. If you want to change the selection, turn the printer off and on to have this message appear again, and then re-select **Stop** or **Continue**.
Toner Exhausted **Replace Toner1**	A toner cartridge has reached its estimated cartridge life[a]. The printer stops printing.	Replace the toner cartridge. (See page 8.5.)

a. Estimated cartridge life means the expected or estimated toner cartridge life, which indicates the average capacity of print-outs and is designed pursuant to ISO/OEC 19752. The number of pages may be affected by operating environment, printing interval, media type, and media size.

Solving general printing problems

For problems with the operation of your printer, refer to the table for suggested solutions.

Condition	Possible cause	Suggested solutions
The printer does not print.	The printer is not receiving power.	Check the power cord connections. Check the power switch and the power source.
	The printer is not selected as the default printer.	Select **Samsung ML-4550 Series PCL 6** or **Samsung ML-4550 Series PS** as your default printer.
	The printer cover is not closed.	Close the printer cover.
	Paper is jammed.	Clear the paper jam. See page 9.1.
	No paper is loaded.	Load paper. See page 5.4.
	The toner cartridge is not installed.	Install the toner cartridge.
	The printer may be in manual feed mode and out of paper.	Check the display message, add paper to the multi-purpose tray, and press **OK** on the printer's control panel.
	The connection cable between the computer and the printer is not connected properly.	Disconnect the printer cable and reconnect it.
	The connection cable between the computer and the printer is defective.	If possible, attach the cable to another computer that is working properly and try to print a document. You can also try using a different printer cable.
	The port setting is incorrect.	Check the Windows printer setting to make sure that the print job is sent to the correct port. If the computer has more than one port, make sure that the printer is attached to the correct one.

Condition	Possible cause	Suggested solutions
The printer does not print. (Continued)	The printer may be configured incorrectly.	Check the printer properties to ensure that all of the print settings are correct.
	The printer driver may be incorrectly installed.	Reinstall the printer driver; See the **Software Section**. Try printing a test page.
	The printer is malfunctioning.	Check the display message on the control panel to determine if the printer is indicating a system error.
Printer selects print media from the wrong paper source.	The paper source selection in the printer properties may be incorrect.	For many software applications, the paper source selection is found under the **Paper** tab within the printer properties. Select the correct paper source. See the **Software Section**.
Paper does not feed into the printer.	Paper has not been loaded correctly.	Remove paper from the tray and reload it correctly. Check that the paper size guides are set correctly.
	There is too much paper in the tray.	Remove excess paper from the tray.
	The paper is too thick.	Use only paper that meets printer specifications.
Print job is extremely slow.	The job may be very complex.	Reduce the complexity of the page(s) or try adjusting the print quality settings. To adjust the print quality settings, reduce the resolution. If you have set the resolution to **1200 dpi (Best)**, change it to **600 dpi (Normal)**. See the **Software Section**. Change the port setting to the USB or network port to improve print speed. Your printer prints A4-sized paper at 43 ppm and letter-sized paper at 45 ppm. If you use the **ML-4551ND** and install an option duplex unit in the **ML-4550** or **ML-4551N**, your printer prints A4-sized paper at 29 ipm and letter-sized paper at 30 ipm in the duplex printing mode.

Condition	Possible cause	Suggested solutions
Print job is extremely slow. (Continued)	If using Windows 98/Me, the Spooling Setting may be set incorrectly.	From the **Start** menu, choose **Settings** and **Printers**. Right-click the **Samsung ML-4550 Series PCL 6** printer icon, choose **Properties**, click the **Details** tab, and then choose the **Spool Settings** button. Select the desired spool setting.
	The computer may have insufficient random-access memory (RAM).	Install more memory in your printer. See page 10.1.
Half the page is blank.	The page layout is too complex.	Simplify the page layout and remove any unnecessary graphics from the document. Install more memory in your printer. See page 10.1.
	The page orientation setting may be incorrect.	Change the page orientation in your application. See the **Software Section**.
	The paper size and the paper size settings do not match.	Ensure that the paper size in the printer driver settings matches the paper in the tray. Or, ensure that the paper size in the printer driver settings matches the paper selection in the software application settings you use.
The paper keeps jamming.	There is too much paper in the tray.	Remove excess paper from the tray. If printing on special media, use the multi-purpose tray and open the rear cover.
	An incorrect type of paper is being used.	Use only paper that meets printer specifications. If printing on special media, use the multi-purpose tray and open the rear cover.
	An incorrect output method is being used.	Special print media, such as thick paper, should not be printed using the output tray (face-down). Use the rear cover (face-up) instead.
	There may be debris inside the printer.	Open the top cover and remove the debris.

Condition	Possible cause	Suggested solutions
The printer prints, but the text is wrong, garbled, or incomplete.	The printer cable is loose or defective.	Disconnect and reconnect the printer cable. Try a print job that you have already printed successfully. If possible, attach the cable and printer to another computer and try a print job that you know works. Finally, try a new printer cable.
	The wrong printer driver was selected.	Check the application's printer selection menu to ensure that your printer is selected.
	The software application is malfunctioning.	Try printing a job from another application.
	The operating system is malfunctioning.	If printing from Windows (any version), exit to a DOS prompt and verify functionality with the following command: At a **C:** prompt, type **Dir LPT1**, and press **Enter**. (This assumes you are connected to LPT1.) Exit Windows and reboot the computer. Turn the printer off and then back on again.
Pages print, but are blank.	The toner cartridge is defective or out of toner.	Redistribute the toner cartridge. See page 8.4. If necessary, replace the toner cartridge. See page 8.5.
	The file may have blank pages.	Check the file to ensure that it does not contain blank pages.
	Some parts, such as the controller or the board, may be defective.	Contact a service representative.
The illustrations print incorrectly in Adobe Illustrator.	The setting in the software application is wrong.	Select **Download as Bitmap** in the **Advanced Options** window of the graphic properties. Print the document again.

Solving print quality problems

Dirt inside of the printer or improper paper loading may reduce print quality. See the table below to troubleshoot problems.

Condition	Suggested solutions
Light or faded print	If a vertical white streak or faded area appears on the page: • The toner supply is low. You may be able to temporarily extend the toner cartridge life. See page 8.4. If this does not improve print quality, install a new toner cartridge. • The paper may not meet paper specifications (for example, the paper is too moist or too rough). See page 5.3. • If the entire page is light, the print resolution setting is too light or toner save mode is on. Adjust the print resolution and toner save mode in the printer properties. See the **Software Section**. • If the entire page is faded with "**Toner Low Replace Toner**" message on LCD, set "**CLR Empty Msg.**" to "**On**" referring to page 8.7. In this case, you can keep printing but the quality cannot be guaranteed, and the product support is no longer provided. • A combination of faded or smeared defects may indicate that the printer needs cleaning. See page 8.1. • The surface of LSU may be dirty. Clean the LSU. See page 8.2.
Toner spots	• The paper may not meet specifications (for example, the paper is too moist or too rough). See page 5.3. • The transfer roller or paper path may be dirty. See page 8.1.
Dropouts	If generally rounded, faded areas occur randomly on the page: • A single sheet of paper may be defective. Try reprinting the job. • The moisture content of the paper is uneven or the paper has moist spots on its surface. Try a different brand of paper. See page 5.3. • The paper lot is bad. The manufacturing processes can cause some areas to reject toner. Try a different kind or brand of paper. • The toner cartridge may be defective. See “Vertical repetitive defects” on the next page. • If these steps do not correct the problems, contact a service representative.
Vertical lines	If black vertical streaks appear on the page: • The drum inside the toner cartridge has probably been scratched. Install a new toner cartridge. See page 8.5. If white vertical streaks appear on the page: • The surface of the LSU part inside the printer may be dirty. Clean the LSU. See page 8.2.
Gray background	If the amount of background shading becomes unacceptable, the procedures below may fix the problem. • Change to lighter weight pages. See page 5.3. • Check the printer’s environment; very dry (low humidity) or high humidity (higher than 80% RH) conditions can increase the amount of background shading. • Remove the old toner cartridge and install a new one. See page 8.5.
Toner smear	• Clean the inside of the printer. See page 8.1. • Check the type and quality. See page 5.2. • Remove the toner cartridge and install a new one. See page 8.5.

Condition	Suggested solutions
Vertical repetitive defects	If marks repeatedly appear on the printed side of the page at even intervals: • The toner cartridge may be damaged. If a repetitive mark occurs on the page, print a cleaning sheet several times to clean the cartridge; see page 8.3. After the printout, if you still have the same problems, install a new toner cartridge. See page 8.5. • Parts of the printer may have toner on them. If the defects occur on the back of the page, the problem will likely correct itself after a few more pages. • The fusing assembly may be damaged. Contact a service representative.
Background scatter	Background scatter results from bits of toner distributed on the printed page. • The paper may be too damp. Try printing with a different batch of paper. Do not open packages of paper until necessary so that the paper does not absorb too much moisture. • If background scatter occurs on an envelope, change the printing layout to avoid printing over areas that have overlapping seams on the reverse side. Printing on seams can cause problems. • If background scatter covers the entire surface area of a printed page, adjust the print resolution through your software application or via the printer properties window.
Misformed characters	• If characters are improperly formed and producing hollowed images, the paper stock may be too slick. Try a different paper. See page 5.3. • If characters are improperly formed and producing a wavy effect, the scanner unit may need service. Verify that it also occurs on a demo page (see page 2.8). For service, contact a service representative.
Page skew	• Ensure that the paper is loaded properly. • Check the paper type and quality. See page 5.2. • Ensure that the paper or other media is loaded correctly and the guides are not too tight or too loose against the paper stack.

Condition	Suggested solutions
Curl or wave	• Ensure that the paper is loaded properly. • Check the type and quality. Both high temperature and humidity can cause paper curl. See page 5.2. • Turn over the stack of paper in the tray. Also try rotating the paper 180° in the tray. • Try printing to the rear cover (face-up).
Wrinkles or creases	• Ensure that the paper is loaded properly. • Check the paper type and quality. See page 5.2. • Open the rear cover and try printing to the rear cover (face-up). • Turn over the stack of paper in the tray. Also try rotating the paper 180° in the tray.
Back of printouts are dirty	• The transfer roller may be dirty. See page 8.1. • Check for leaking toner. Clean the inside of the printer.
Solid color or Black pages	• The toner cartridge may not be installed properly. Remove the cartridge and reinsert. • The toner cartridge may be defective and need replacing. Install a new toner cartridge. • The printer may require repair. Contact a service representative.
Loose toner	• Clean the inside of the printer. • Check the paper type and quality. See page 5.2. • Install a new toner cartridge. See page 8.5. • If the problem persists, the printer may require repair. Contact a service representative.

Condition	Suggested solutions
Character Voids 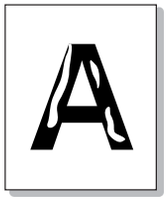	Character voids are white areas within characters that should be solid black: • If you are using transparencies, try another type of transparency. Because of the composition of the transparency, some character voids may be normal. • You may be printing on the wrong surface on the paper. Remove the paper and turn it around. • The paper may not meet paper specifications. See page 5.3.
Horizontal stripes 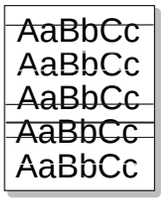	If horizontally aligned black streaks or smears appear: • The toner cartridge may be installed improperly. Remove the cartridge and reinsert. • The toner cartridge may be defective. Install a new toner cartridge. See page 8.5. • If the problem persists, the printer may require repair. Contact a service representative.
Curl 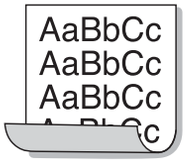	If the printed paper is curled or paper does not feed into the printer: • Turn over the stack of paper in the tray. Also try rotating the paper 180° in the tray. • Try printing to rear cover (face up).
An unknown image repetitively appears on a next few sheets or loose toner, light print or contamination occurs.	Your printer is probably being used at an altitude of 2,500 m (8,200 ft) or above. The high altitude may affect the print quality such as loose toner or light imaging. You can set this option through **Printer Settings Utility** or **Printer** Tab in printer driver's properties. Refer to the **Software Section** for details.

Common Windows problems

Condition	Suggested solutions
"File in Use" message appears during installation.	Exit all software applications. Remove all software from the StartUp Group, then restart Windows. Reinstall the printer driver.
"Error Writing to LPTx" message appears.	• Ensure that the cables are connected correctly, the printer is on. • If bi-directional communication is not turned on in the driver, it will also cause this message.
"General Protection Fault", "Exception OE", "Spool32", or "Illegal Operation" messages appear.	Close all other applications, reboot Windows, and try printing again.
"Fail To Print," "A printer timeout error occurred," messages appear.	These messages may appear during printing. Just keep waiting until the printer finishes printing. If the message appears in standby mode or after printing has been completed, check the connection and/or whether an error has occurred.

Note
- Refer to Microsoft Windows User's Guide that came with your computer for further information on Windows error messages.

Common PostScript problems

The following situations are PostScript language specific and may occur when several printer languages are being used.

Note
- To receive a printed or screen displayed message when PostScript errors occur, open the Print Options window and click the desired selection next to the PostScript errors section.

Condition	Possible cause	Suggested solutions
PostScript file can not be printed.	The PostScript driver may not be installed correctly.	• Print a configuration page and verify that the PostScript version is available for printing. • Install the PostScript driver; to installing the PS printer driver, see the **Software Section**. • If problem consists, contact a service representative.
"Limit Check Error" message appears.	The print job was too complex.	You might need to reduce the complexity of the page or install more memory.

Condition	Possible cause	Suggested solutions
A PostScript error page prints.	Print job may not be PostScript.	Make sure that the print job is a PostScript job. Check to see whether the software application expected a setup or PostScript header file to be sent to the printer.
The optional tray 2 (tray 3 or tray 4) is not selected in the driver.	The printer driver has not been configured to recognize the optional tray 2 (tray 3 or tray 4).	Open the PostScript driver properties, select the **Device Settings** tab, and set the **Tray2** (**Tray3** or **Tray4**) option of the **Installable Options** section to **Installed**.
When print a document in Macintosh with Acrobat Reader 6.0 or higher, colors print incorrectly.	The resolution setting in the printer driver may not be matched with that in Acrobat Reader.	Make sure that the resolution setting in your printer driver matches that in Acrobat Reader.

Common Linux problems

Condition	Suggested solutions
The printer doesn't print.	• Check if the printer driver is installed in your system. Open Unified Driver Configurator and switch to the Printers tab in Printers configuration window to look at the list of available printers. Make sure that your machine is displayed on the list. If not, please, invoke Add new printer wizard to set up your device. • Check if the printer is started. Open Printers configuration and select your machine on the printers list. Look at the description in the Selected printer pane. If its status contains "(stopped)" string, please, press the **OK** button. After that normal operation of the printer should be restored. The "stopped" status might be activated when some problems in printing occurred.
I encounter error "Unable to open mfp port device file!" when printing a document.	Please avoid changing print job parameters (via LPR GUI, for example) while a print job is in progress. Known versions of CUPS server break the print job whenever print options are changed and then try to restart the job from the beginning. Since Unified Linux Driver locks mfp port while printing, the abrupt termination of the driver keeps the port locked and therefore unavailable for subsequent print jobs. If this situation occurred, please, try to release the mfp port.

Common Macintosh problems

Condition	Suggested solutions
The printer does not print a document from Acrobat Reader.	Change the **Print Method** option to **Print as Image** when you print from Acrobat Reader.
The document has printed, but the print job has not disappeared from the spooler in Mac OS 10.3.2.	Update your Mac OS to OS 10.3.3 or higher.
The printer does not print a document from Illustrator on IPP printing.	Change the **Data type** option in the Adobe Illustrator print menu to **Binary**. Or, you can use Appletalk printing.

10 Installing accessories

Your printer is a full-featured laser printer that has been optimized to meet the majority of your printing needs. Recognizing that each user may have different requirements, however, Samsung makes several accessories available to enhance the printer's capabilities.

This chapter includes:

- **Precautions when installing accessories**
- **Installing a dual in-line memory module (DIMM)**
- **Installing a network interface card**
- **Using the hard disk**

Precautions when installing accessories

Disconnect the power cord:

Never remove the control board cover while the printer is plugged in.

To avoid the possibility of an electrical shock, always disconnect the power cord when installing or removing ANY internal or external accessories.

Discharge static electricity:

The control board and internal accessories (network interface card, DIMM, and hard disk) are sensitive to static electricity. Before installing or removing internal accessories, discharge static electricity from your body by touching something metal, such as the metal back plate on any device plugged into a grounded power source. If you walk round before finishing installation, discharge any static electricity once again.

Installing a dual in-line memory module (DIMM)

Your printer has a dual in-line memory module (DIMM) slot. Use this DIMM slot to install additional memory.

Your printer has 128 MB of memory which can be expanded to 512 MB. For information about ordering optional DIMMs, see page 7.1.

1 Turn the printer power off and unplug the power cord and printer cable from the printer.

2 Remove the duplex-slot cover or the duplex unit from the back of the printer.

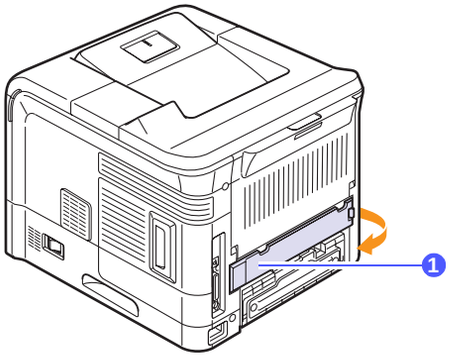

1	duplex-slot cover

3 Grasp the control board cover and remove it.

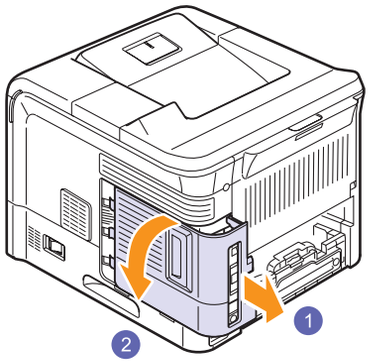

4 Take out a new DIMM from its plastic bag.

5 Locate the extra DMM slot and align the notch on the DIMM with the groose at the DIMM slot, holding the DIMM by its edges.

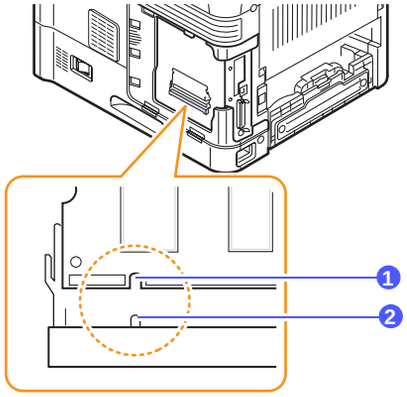

1	notch
2	groove

6 Push the DIMM into the printer until it snaps into place. Make sure that the latches fit over the notches located on either side of the DIMM.

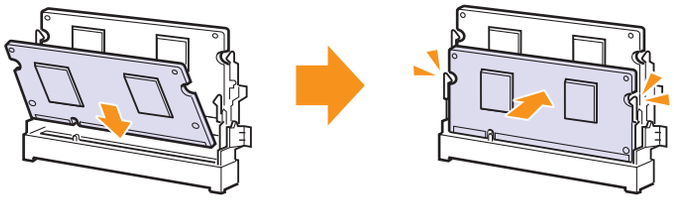

7 Close the control board cover by aligning the groove on it with the notch on the printer and sliding it.

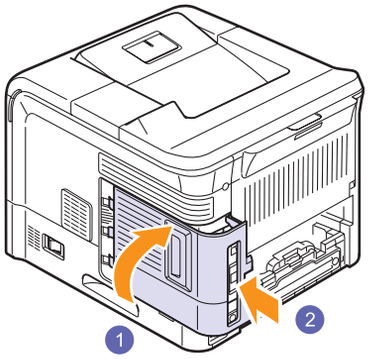

8 Reinstall the duplex-slot cover or the duplex unit.

9 Reconnect the power cord and printer cable, and turn the printer on.

Setting the memory in the PostScript printer properties

After installing the DIMM, you need to select it in the printer properties of the PostScript printer driver to enable its use.

1 Make sure that the PostScript printer driver is installed on your computer. To install the PostScript printer driver, see the **Software Section**.

2 Click the Windows **Start** menu.

3 For Windows 2000, select **Settings** and then **Printers**.

For Windows XP/2003, select **Printers and Faxes**.

For Windows Vista/2008, select **Control Panel** > **Hardware and Sound** > **Printers**.

For Windows 7, select **Control Panel** > **Hardware and Sound** > **Devices and Printers**.

For Windows Server 2008 R2, select **Control Panel** > **Hardware** > **Devices and Printers**.

4 Select the **Samsung ML-4550 Series PS** printer.

5 Click the right mouse button on the printer icon and select **Properties**.

6 Select the **Device Settings** tab.

7 Select the amount of memory you installed from **Printer Memory** in the **Installable Options** section.

8 Click **OK**.

Removing a DIMM

To expand the printer memory to 512 MB, you need to remove the preinstalled 128 MB DIMM and install two 256 MB DIMMs into the DIMM slots.

Push the latches at both ends of the DIMM slot away to remove the DIMM and pull out the DIMM.

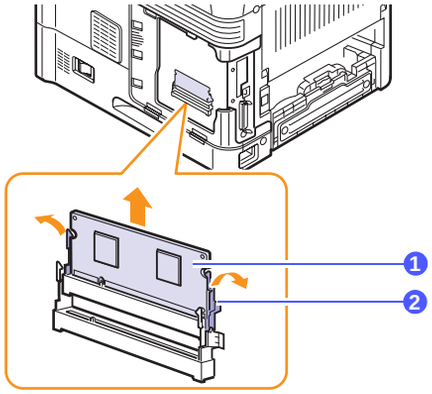

1	latch
2	DIMM

Installing a network interface card

The ML-4551N and ML-4551ND are equipped with wired network interface cards, allowing you to use your printer on a network.

To use the ML-4550 in network environments, you need to buy an optional network interface card. For order information, see page 7.1.

Review the precautions on page 10.1 and then follow this procedure to install a network interface card in your printer.

1 Turn the printer power off and unplug the power cord and printer cable from the printer.

2 Remove the duplex-slot cover or the duplex unit from the back of the printer.

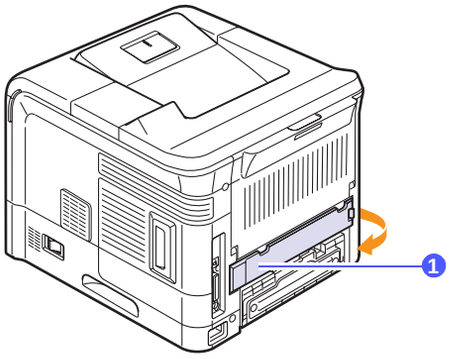

1	duplex-slot cover

3 Grasp the control board cover and remove it.

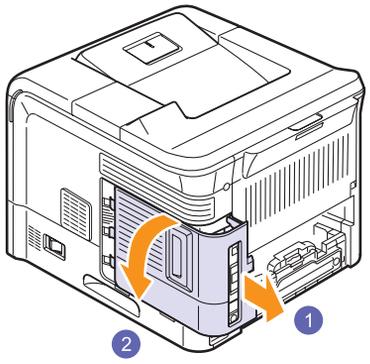

Note

- Knowing the connectors' name and location will make it easy to install the accessories.

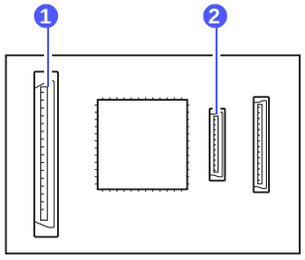

1	hard disk connector
2	wired network connector

4 Align the connector on the wired network interface card with the connector on the control board. Push the card firmly into the connector on the control board until it is completely and securely in place.

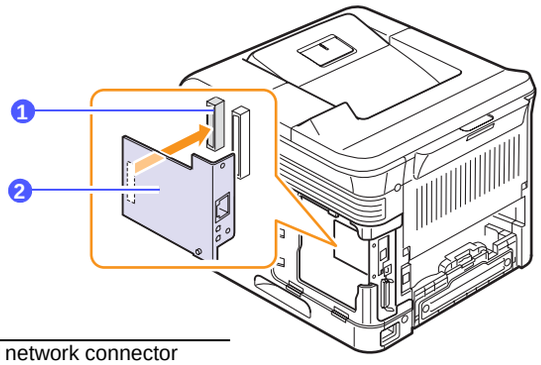

1	wired network connector
2	wired network interface card

5 Insert and tighten the two screws supplied with your network card.

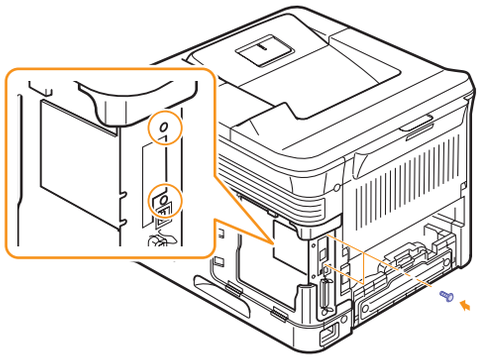

6 Close the control board cover by aligning the groove on it with the notch on the printer and sliding it.

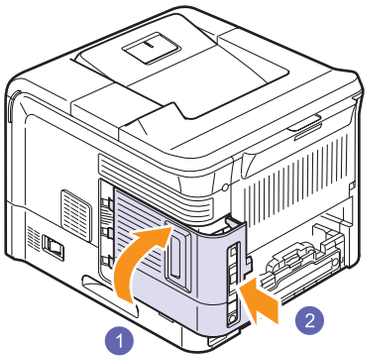

7 Reinstall the duplex-slot cover or the duplex unit.

8 Reconnect the power cord and printer cable (if necessary), and turn the printer on.

Using the hard disk

Installing the hard disk allows the data from your computer to be sent to the print queue of the printer hard disk. This decreases the workload of the computer. You can also use various print features, such as storing a job in the hard disk, proofing a job, and printing private documents.

Installing the hard disk

For order information, see page 7.1.

Review the precautions on page 10.1.

1 Turn the printer power off and unplug the power cord and printer cable from the printer.

2 Remove the duplex-slot cover or the duplex unit from the back of the printer.

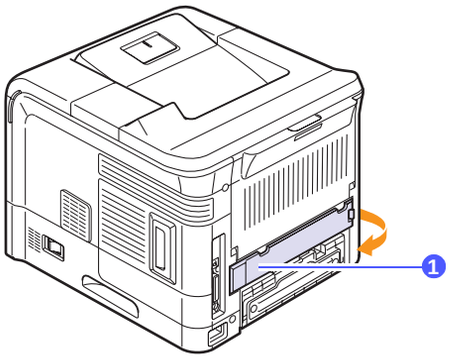

1	duplex-slot cover

3 Grasp the control board cover and remove it.

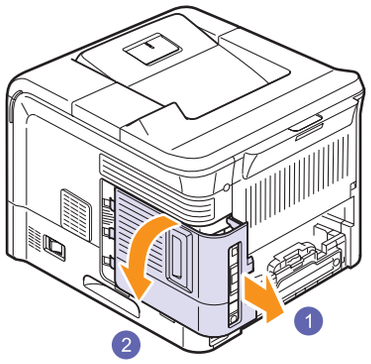

4 Align the connector on the hard disk with the connector on the control board. Push the hard disk in until it is latched into place.

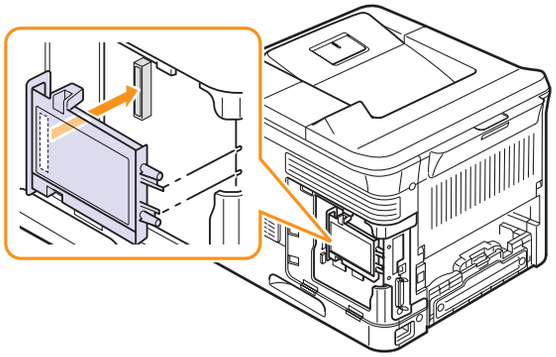

5 Fasten the four screws supplied with your new hard disk.

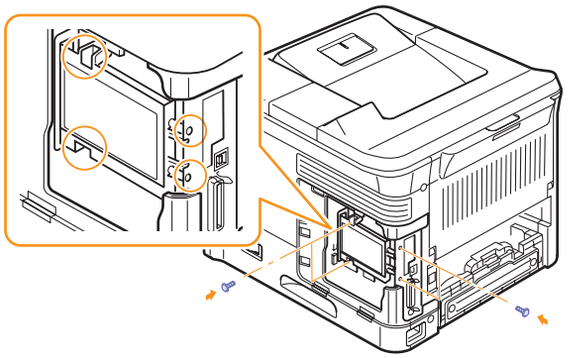

6 Close the control board cover by aligning the groove on it with the notch on the printer and sliding it.

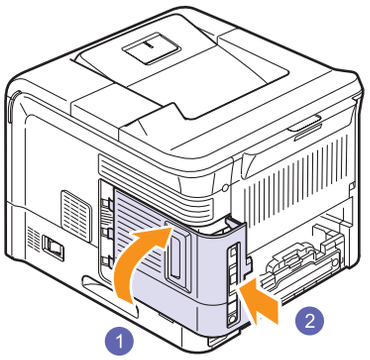

7 Reinstall the duplex-slot cover or the duplex unit.

8 Reconnect the power cord and printer cable, and turn the printer on.

9 Print a configuration page from the control panel to check if the hard disk is correctly installed. See page 8.1.

Setting the hard disk in the printer properties

After installing the hard disk, you need to select it in the printer properties to enable its use. Take the following steps:

1 Click the Windows **Start** menu.

2 For Windows 2000, select **Settings** and then **Printers**.

For Windows XP/2003, select **Printers and Faxes**.

For Windows Vista/2008, select **Control Panel** > **Hardware and Sound** > **Printers**.

For Windows 7, select **Control Panel** > **Hardware and Sound** > **Devices and Printers**.

For Windows Server 2008 R2, select **Control Panel** > **Hardware** > **Devices and Printers**.

3 Select the **Samsung ML-4550 Series PCL 6** printer icon or **Samsung ML-4550 Series PS** printer icon.

4 Click the right mouse button on the printer icon and select **Properties**.

5 In PCL 6 Properties, click the **Printer** tab and then check **Optional Hard Disk Drive (HDD)**.

In PS Properties, click the **Device Option** or **Device Settings** tab and set the **Optional Hard Disk Drive (HDD)** option to **Installed**.

6 Click **OK**.

Printing with the optional hard disk

After installing the optional hard disk, you can use advanced printing features, such as storing or spooling a print job to the hard disk, proofing a job, and specifying of printing a private job in the printer properties window.

Once you have stored files in the hard disk, you can easily print or delete the stored files using the control panel of your printer.

Setting the time and date

1 Press **Menu** until **System Setup** appears on the bottom line of the display and press **OK**.

2 Press **OK** when **Date & Time** appears.

3 Press the **Scroll** buttons until the digit you want appears and press **OK**.

You can enter from 2000 to 2065 in the year input section. The cursor moves to the next position.

4 Repeat step 3 until all digits appear correctly.

5 Press **OK**.

Storing a job

You can store jobs in the installed hard disk.

1 Open the file you want to store.

2 Select **Print** from the **File** menu. The Print window displays.

3 Click **Properties**. If you see **Setup**, **Print** or **Options**, click the button instead.

4 Click the **Extra** tab and click **Print and Hold**.

5 Select the print mode you want from the drop-down list.

- **Normal**: prints in normal mode.
- **Proof**: prints the first file and after a pause prints the next file.
- **Confidentical**: stores the files, securing them with a password.
- **Store**: stores the file to the hard disk.
- **Spool**: spools the file into the hard disk and prints it from the hard disk queue.
- **Delay**: prints the file at a specified time.

6 Enter the user's name and file name.

7 Click **OK** until the Print window is displayed.

8 Click **OK** or **Print** to start printing.

Printing a stored job

You can print jobs currently stored in the hard disk.

1 Press **Menu** until **Job Manage.** appears on the bottom line of the display and press **OK**.

2 Press the **Scroll** buttons until **Store Job** appears and press **OK**.

3 Press the **Scroll** buttons until the user's name and file name you want appear and press **OK**.

4 If the select file is a confidential print job, enter the specified 4-digit password.

Press the **Scroll** buttons to enter the first digit and press **OK**. The cursor automatically moves to the next digit position. Enter the 2nd, 3rd, and 4th digit in the same way.

5 When **Print** appears, press **OK**.

If you enter the incorrect password, **Invalid Password** appears. Reenter the correct password.

6 Press the **Scroll** buttons until the number of copies you want appears and press **OK**.

7 Press **OK**. Printing starts.

Deleting a stored job

You can delete jobs currently stored in the hard disk.

1 Press **Menu** until **Job Manage.** appears on the bottom line of the display and press **OK**.

2 Press the **Scroll** buttons until **Store Job** appears and press **OK**.

3 Press the **Scroll** buttons until the user's name and file name you want appear and press **OK**.

4 If the select file is a confidential print job, enter the specified 4-digit password.

Press the **Scroll** buttons to enter the first digit and press **OK**. The cursor automatically moves to the next digit position. Enter the 2nd, 3rd, and 4th digit in the same way.

5 Press the **Scroll** buttons until **Delete** appears and press **OK**.

If you enter the incorrect password, **Invalid Password** appears. Reenter the correct password.

6 When **Yes** appears, press **OK**.

Controlling the active job queue

All of the print jobs waiting to be printed are listed in the Active Job Queue in the order you sent them to the printer. You can delete a job from the queue before printing, or promote a job to print sooner.

To delete a file from the queue:

1 Press **Menu** until **Job Manage.** appears on the bottom line of the display and press **OK**.

2 Press the **Scroll** buttons until **Active Job** appears and press **OK**.

3 Press the **Scroll** buttons until the user's name and file name you want appear and press **OK**.

4 If the select file is a confidential print job, enter the specified 4-digit password.

Press the **Scroll** buttons to enter the first digit and press **OK**. The cursor automatically moves to the next digit position. Enter the 2nd, 3rd, and 4th digit in the same way.

5 Press the **Scroll** buttons until **Cancel** appears and press **OK**.

If you enter the incorrect password, **Invalid Password** appears. Reenter the correct password.

6 Press the **Scroll** buttons until **Yes** appears and press **OK**.

To promote a file from the queue:

You can select a job waiting in the Active Job Queue and change its print order so that it can be printed sooner.

1 Press **Menu** until **Job Manage.** appears on the bottom line of the display and press **OK**.

2 Press the **Scroll** buttons until **Active Job** appears and press **OK**.

3 Press the **Scroll** buttons until the user's name and file name you want appear and press **OK**.

4 If the select file is a confidential print job, enter the specified 4-digit password.

Press the **Scroll** buttons to enter the first digit and press **OK**. The cursor automatically moves to the next digit position. Enter the 2nd, 3rd, and 4th digit in the same way.

5 Press the **Scroll** buttons until **Promote** appears and press **OK**.

If you enter the incorrect password, **Invalid Password** appears. Reenter the correct password.

To print a file immediately:

You can print a job scheduled to be printed at a specified time immediately. In this case, the job currently printing is stopped and the selected job will be printed. This function is available when the job is scheduled for later printing.

1 Press **Menu** until **Job Manage.** appears on the bottom line of the display and press **OK**.

2 Press the **Scroll** buttons until **Active Job** appears and press **OK**.

3 Press the **Scroll** buttons until the user's name and file name you want appear and press **OK**.

4 If the select file is a confidential print job, enter the specified 4-digit password.

Press the **Scroll** buttons to enter the first digit and press **OK**. The cursor automatically moves to the next digit position. Enter the 2nd, 3rd, and 4th digit in the same way.

5 Press the **Scroll** buttons until **Release** appears and press **OK**.

This option appears only when you select a **Delay** print job. See page 10.6.

If you enter the incorrect password, **Invalid Password** appears. Reenter the correct password.

Printing using the form files

You can store up to 10 form files in the hard disk and make them printed with your document.

First, you need to create a form file using the printer driver. See the **Software Section**.

1 Press **Menu** until **System Setup** appears on the bottom line of the display and press **OK**.

2 Press the **Scroll** buttons until **Form Menu** appears and press **OK**.

3 Press the **Scroll** buttons until the form you want appears and press **OK**.

- **Off**: prints in normal mode.
- **Single Form**: prints all page using the first form.
- **Double Form**: prints the front page using the first form and the back page using the second form.

4 Press **Back** to return to the upper menu level.

5 Press the **Scroll** buttons until **Select Form** appears and press **OK**.

6 Press **OK** when **1st Form** appears.

7 Press the **Scroll** buttons until the form file you want appears and press **OK**.

If you select **Double Form**, continue the next step.

8 Press the **Scroll** buttons until **2nd Form** appears and press **OK**.

9 Press the **Scroll** buttons until the form file for the second form appears and press **OK**.

11 Specifications

Printer specifications

Item	Specifications and Description	
Printing speed[a]	Up to 43 ppm in A4 (45 ppm in Letter) Duplex: 29 ipm (A4); 30 ipm (Letter)	
Resolution	Up to 1200 x 1200 dpi	
Warm-up time	Less than 45 seconds	
First print out time	8.5 seconds (From Ready) Sleep mode: 35 seconds	
Power rating	110 - 127 VAC or 220 - 240 VAC See the Rating label on the machine for the correct voltage, hertz and current of your machine.	
Power consumption	Average: 650 W Power save mode: Less than 13 W	
Noise level[b]	Standby mode: Less than 35 dBA Printing mode: Less than 57 dBA	
Toner cartridge yield[c]	10,000 or 20,000 pages.	
Weight	ML-4550, ML-4551N	21.7 Kg (including consumables)
	ML-4551ND	23.6 Kg (including consumables)
Package weight	ML-4550, ML-4551N	Paper: 2.8 Kg, Plastic: 0.7 Kg
	ML-4551ND	Paper: 3.0 Kg, Plastic: 0.8 Kg
External dimensions (W x D x H)	ML-4550, ML-4551N	15.6 X 18.4 X 13.9 inches (396 X 468 X 353 mm)
	ML-4551ND	15.6 X 19.7 X 13.9 inches (396 X 501 X 353 mm)
Operating environment	Temperature: 50° F to 90° F (10° C to 32.5° C) Humidity: 20% to 80% RH	
Printer language	PCL 6[d], PostScript 3, IBM ProPrinter, EPSON	
Memory	128 MB (Max. 512 MB)	
	128, or 256 MB optional memory available. Use only the Samsung-approved DIMM. 128 MB: ML-MEM150 256 MB: ML-MEM160	
Display	16 characters x 2 lines	
Fonts	1 bitmap, 45 scalable, 136 PostScript 3 fonts, Bar Code fonts, OCR fonts	

Item	Specifications and Description	
Interface	• IEEE 1284 Bidirectional Parallel Standard - Modes supported: Compatible, Nibble, Byte, ECP • USB Interface Standard - USB 2.0 compliant - 480 Mbps 1 port • Network Interface - ML-4551N, ML-4551ND: enthernet 10/100 Base TX wired LAN	
OS compatibility	• Windows 2000/XP/2003/2008/Vista/7/Server 2008 R2 • Various Linux OS • Mac 8.6 ~ 9.2/10.1 ~ 10.6	
Printer drivers[e]	• PCL driver: Windows 2000/XP/2003/2008/Vista/7/Server 2008 R2 • Various Linux OS • PostScript driver: Windows 2000/XP/2003/2008/Vista/7/Server 2008 R2, Macintosh OS 8.6 ~ 9.2/10.1 ~ 10.6	
Options	ML-4550	500-sheet trays, ethernet 10/100 Base TX wired LAN, hard disk, duplex unit, DIMM
	ML-4551N,	500-sheet trays, hard disk, duplex unit, DIMM
	ML-4551ND	500-sheet trays, hard disk, DIMM

a. Print speed will be affected by operating system used, computing performance, application software, connection method, media type, media size, and job complexity.
b. Sound pressure Level, ISO7779
c. Average cartridge yield declared in accordance with ISO/IEC 19752.
The number of pages may be affected by operating environment, printing interval, media type, and media size. It varies depending on the product configuration.
d. Compatible with PCL6 Version 2.1
e. Please visit www.samsungprinter.com to download the latest software version.

INDEX

A

accessories
- installing
  - DIMM 10.1
  - hard disk 10.4
  - network interface card/device 10.3
- order information 7.1

C

cleaning
- drum 8.3
- inside 8.1
- outside 8.1

cleaning sheet, print 8.3
component location 1.3
control panel
- buttons 1.4
- menus 2.1
- status LED 9.6

D

demo page, print 2.8
DIMM, install 10.1
display language, change
- control panel 2.8

display messages 9.6
drum, clean 8.3

E

error messages 9.6

H

hard disk
- installing 10.4
- use 10.6

I

installing accessories
- hard disk 10.4
- memory 10.1
- network interface card/device 10.3

J

jam, clear 9.1

L

Linux problems 9.14
loading paper
- multi-purpose tray 5.6
- tray 5.5

M

Macintosh problems 9.14
maintenance parts 8.7
manual feed mode 5.7
memory 10.1
multi-purpose tray 5.6

N

network interface card/device, install 10.3
network setup
- EtherTalk 4.2
- IPX frame types 4.3
- operating systems 4.2
- TCP/IP 4.2

O

output location, select 5.8
output tray 5.8

P

paper guidelines 5.3
paper jam, clear
- around the toner cartridge 9.3
- duplex area 9.4
- multi-purpose tray 9.3
- optional tray 2 9.2
- optional tray 3 9.2
- optional tray 4 9.2
- paper exit area 9.4
- tray 1 9.2

paper level indicator 5.4
paper load
- multi-purpose tray 5.6
- tray 5.5

paper size
- setting 2.4
- specifications 5.2

paper type
- setting 2.4
- specifications 5.2

PostScript problems 9.13
print quality problems, solve 9.11
printing
- demo page 2.8
- information page 8.1
- problems 9.9

problem, solve
- checklist 9.5
- error messages 9.6
- Linux 9.14
- Macintosh 9.14
- paper jams 9.1
- printing 9.9
- printing quality 9.11
- PS errors 9.13
- Windows 9.13

Q

quality problems 9.11

R

rear cover, use 5.8
redistributing, toner cartridge 8.4
replacing, toner cartridge 8.5, 8.7

S

special print media, guidelines 5.3
specification, printer 11.1
status LED, meaning 9.6
supplies
    checking life 8.4
    order information 7.1
system requirements
    Linux 3.3
    Macintosh 3.3
    Windows 3.2

T

toner cartridge
    checkig remaining toner 8.4
    cleaning 8.3
    maintaining 8.3
    redistributing 8.4
    replacing 8.5, 8.7
toner save mode, use 2.8
troubleshooting 9.1

W

Windows problems 9.13

Samsung Printer

Software section

SOFTWARE SECTION
CONTENTS

Chapter 1: INSTALLING PRINTER SOFTWARE IN WINDOWS

Installing Printer Software 4
- Installing Software for Local Printing 4
- Installing Software for Network Printing 7

Reinstalling Printer Software 10

Removing Printer Software 11

Chapter 2: BASIC PRINTING

Printing a Document 12

Printer Settings 13
- Layout Tab 13
- Paper Tab 14
- Graphics Tab 15
- Extras Tab 16
- About Tab 17
- Printer Tab 17
- Using a Favorite Setting 17
- Using Help 17

Chapter 3: ADVANCED PRINTING

Printing Multiple Pages on One Sheet of Paper (N-Up Printing) 18

Printing Posters 19

Printing Booklets 19

Printing on Both Sides of Paper 20

Printing a Reduced or Enlarged Document 20

Fitting Your Document to a Selected Paper Size 20

Using Watermarks 21
- Using an Existing Watermark 21

Creating a Watermark 21
Editing a Watermark 21
Deleting a Watermark 21
Using Overlays 22
What is an Overlay? 22
Creating a New Page Overlay 22
Using a Page Overlay 22
Deleting a Page Overlay 22

Chapter 4: USING WINDOWS POSTSCRIPT DRIVER

Printer Settings 23
Advanced 23
Using Help 23

Chapter 5: USING DIRECT PRINT UTILITY

Overview Direct Print Utility 24
Printing 24
From the Direct Print Utility window 24
Using the shortcut icon 24
Using the right-click menu 24

Chapter 6: SHARING THE PRINTER LOCALLY

Setting Up a Host Computer 25
Setting Up a Client Computer 25

Chapter 7: USING SMART PANEL

Understanding Smart Panel 26
Opening the Troubleshooting Guide 27
Using Printer Settings Utility 27
Using Onscreen Help File 27
Changing the Smart Panel Program Settings 27

Chapter 8: USING YOUR PRINTER IN LINUX

Getting Started 28
Installing the Unified Linux Driver 28
Installing the Unified Linux Driver 28
Uninstalling the Unified Linux Driver 29
Using the Unified Driver Configurator 30
Opening the Unified Driver Configurator 30
Printers Configuration 30
Ports Configuration 31
Configuring Printer Properties 31
Printing a Document 32
Printing from Applications 32
Printing Files 32

Chapter 9: USING YOUR PRINTER WITH A MACINTOSH

Installing Software for Macintosh 33
Setting Up the Printer 34
For a Network-connected Macintosh 34
For a USB-connected Macintosh 34
Printing 35
Printing a Document 35
Changing Printer Settings 35
Printing Multiple Pages on One Sheet of Paper 36
Duplex Printing 37

1 Installing Printer Software in Windows

This chapter includes:

- **Installing Printer Software**
- **Reinstalling Printer Software**
- **Removing Printer Software**

Installing Printer Software

You can install the printer software for local printing or network printing. To install the printer software on the computer, perform the appropriate installation procedure depending on the printer in use.

A printer driver is software that lets your computer communicate with your printer. The procedure to install drivers may differ depending on the operating system you are using.

All applications should be closed on your PC before beginning installation.

Installing Software for Local Printing

A local printer is a printer directly attached to your computer using the printer cable supplied with your printer, such as a USB or parallel cable. If your printer is attached to a network, skip this step and go to "Installing Software for Network Printing" on page 7.

You can install the printer software using the typical or custom method.

NOTE: If the "New Hardware Wizard" window appears during the installation procedure, click ☒ in the upper right corner of the box to close the window, or click **Cancel**.

Typical Installation

This is recommended for most users. All components necessary for printer operations will be installed.

1. Make sure that the printer is connected to your computer and powered on.

2. Insert the supplied CD-ROM into your CD-ROM drive.
   If you use Windows Vista, Windows 7 and Windows Server 2008 R2, when you are asked to allow the installation, click **continue**.

   The CD-ROM should automatically run, and an installation window appears.

   If the installation window does not appear, click **Start** and then **Run**. Type **X:\Setup.exe**, replacing "**X**" with the letter which represents your drive and click **OK**.
   If you use Windows Vista, Windows 7 and Windows Server 2008 R2, click **Start** → **All Programs** → **Accessories** → **Run**, and type **X:\Setup.exe**.

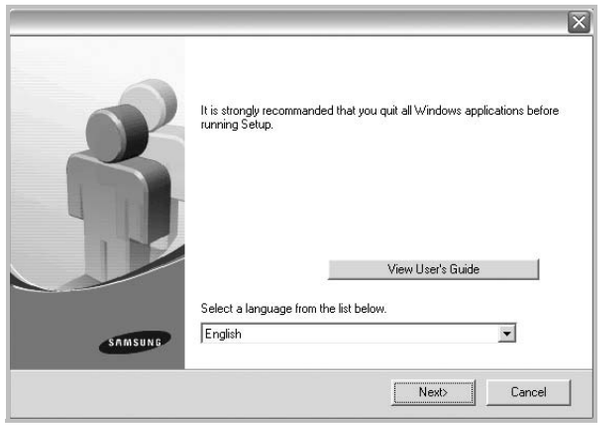

3. Click **Next**.
   - If necessary, select a language from the drop-down list.
   - **View User's Guide**: Allows you to view the User's Guide. If your computer doesn't have Adobe Acrobat, click on this option and it will automatically install Adobe Acrobat Reader for you.

4 Select **Typical installation for a local printer**. Click **Next**.

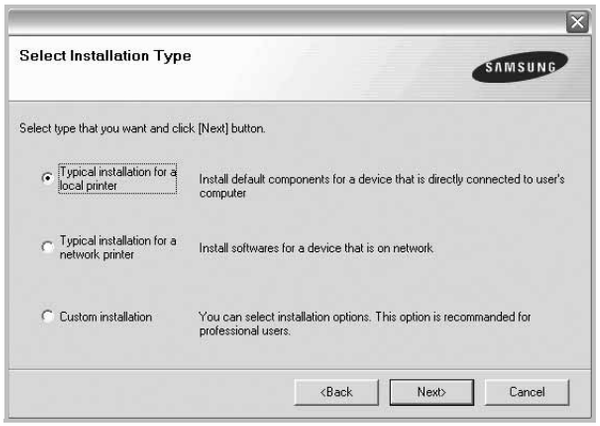

NOTE: If your printer is not already connected to the computer, the following window will appear.

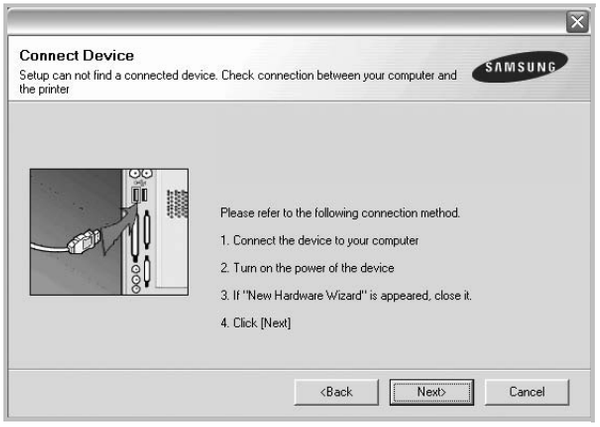

- After connecting the printer, click **Next**.
- If you don't want to connect the printer at this time, click **Next**, and **No** on the following screen. Then the installation will start and a test page will not be printed at the end of the installation.
- ***The installation window that appears in this User's Guide may differ depending on the printer and interface in use.***

5 After the installation is finished, a window asking you to print a test page appears. If you choose to print a test page, select the checkbox and click **Next**.

Otherwise, just click **Next** and skip to step 7.

6 If the test page prints out correctly, click **Yes**.

If not, click **No** to reprint it.

7 To register yourself as a user of Samsung Printers in order to receive information from Samsung, select the checkbox and click **Finish**. You are now sent to the Samsung web site.

Otherwise, just click **Finish**.

NOTE: After setup is complete, if your printer driver doesn't work properly, reinstall the printer driver. See "Reinstalling Printer Software" on page 10.

Custom Installation

You can choose individual components to install.

1 Make sure that the printer is connected to your computer and powered on.

2 Insert the supplied CD-ROM into your CD-ROM drive.
If you use Windows Vista, Windows 7 and Windows Server 2008 R2, when you are asked to allow the installation, click **continue**.

The CD-ROM should automatically run, and an installation window appears.

If the installation window does not appear, click **Start** and then **Run**. Type **X:\Setup.exe**, replacing "**X**" with the letter which represents your drive and click **OK**.
If you use Windows Vista, Windows 7 and Windows Server

2008 R2, click **Start** → **All Programs** → **Accessories** → **Run**, and type **X:\Setup.exe**.

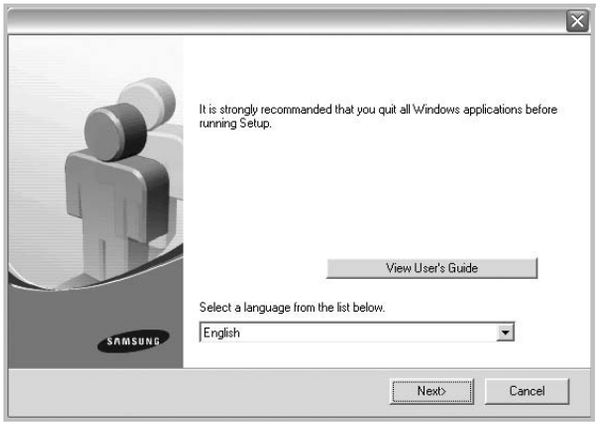

3 Click **Next**.

- If necessary, select a language from the drop-down list.
- **View User's Guide**: Allows you to view the User's Guide. If your computer doesn't have Adobe Acrobat, click on this option and it will automatically install Adobe Acrobat Reader for you.

4 Select **Custom installation**. Click **Next**.

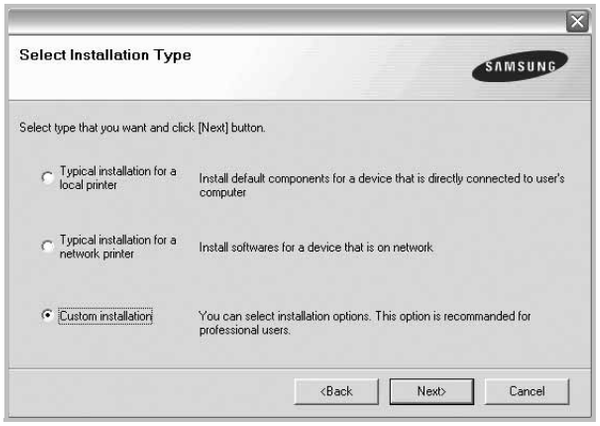

5 Select your printer and click **Next**.

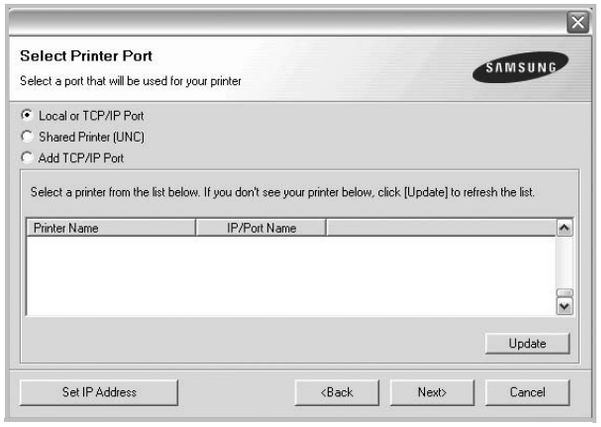

NOTE: If your printer is not already connected to the computer, the following window will appear.

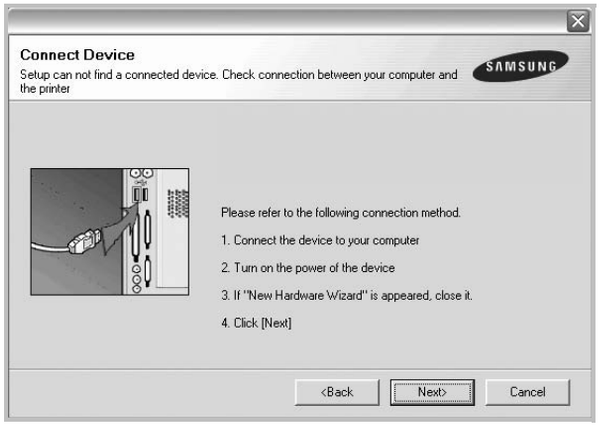

- After connecting the printer, click **Next**.
- If you don't want to connect the printer at this time, click **Next**, and **No** on the following screen. Then the installation will start and a test page will not be printed at the end of the installation.
- ***The installation window that appears in this User's Guide may differ depending on the printer and interface in use.***

6 Select the components to be installed and click **Next**.

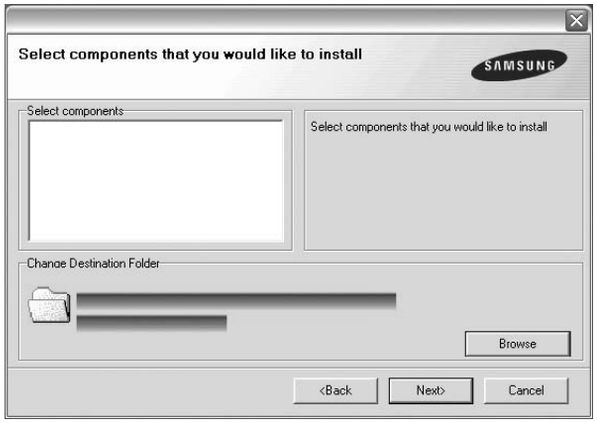

NOTE: You can change the desired installation folder by clicking [**Browse**].

7 After the installation is finished, a window asking you to print a test page appears. If you choose to print a test page, select the checkbox and click **Next**.

Otherwise, just click **Next** and skip to step 9.

8 If the test page prints out correctly, click **Yes**.

If not, click **No** to reprint it.

9 To register yourself as a user of Samsung Printers in order to receive information from Samsung, select the checkbox and click **Finish**. You are now sent to the Samsung web site.

Otherwise, just click **Finish**.

Installing Software for Network Printing

When you connect your printer to a network, you must first configure the TCP/IP settings for the printer. After you have assigned and verified the TCP/IP settings, you are ready to install the software on each computer on the network.

You can install the printer software using the typical or custom method.

Typical Installation

This is recommended for most users. All components necessary for printer operations will be installed.

1 Make sure that the printer is connected to your network and powered on. For details about connecting to the network, see the supplied printer's User's Guide.

2 Insert the supplied CD-ROM into your CD-ROM drive.
If you use Windows Vista, Windows 7 and Windows Server 2008 R2, when you are asked to allow the installation, click **continue**.

The CD-ROM should automatically run, and an installation window appears.

If the installation window does not appear, click **Start** and then **Run**. Type **X:\Setup.exe**, replacing "**X**" with the letter which represents your drive and click **OK**.
If you use Windows Vista, Windows 7 and Windows Server 2008 R2, click **Start** → **All Programs** → **Accessories** → **Run**, and type **X:\Setup.exe**.

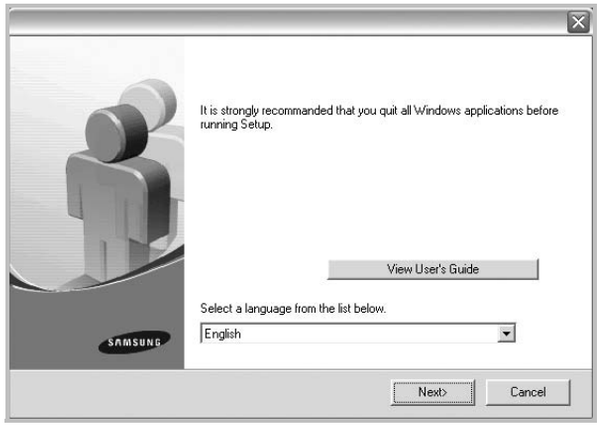

3 Click **Next**.

- If necessary, select a language from the drop-down list.
- **View User's Guide**: Allows you to view the User's Guide. If your computer doesn't have Adobe Acrobat, click on this option and it will automatically install Adobe Acrobat Reader for you.

4 Select **Typical installation for a network printer**. Click **Next**.

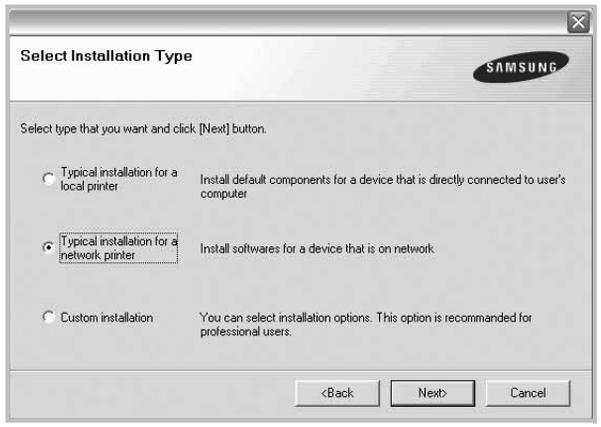

5 The list of printers available on the network appears. Select the printer you want to install from the list and then click **Next**.

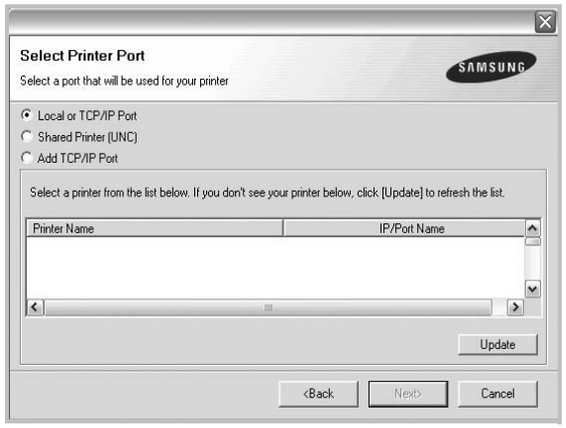

- If you do not see your printer on the list, click **Update** to refresh the list, or select **Add TCP/IP Port** to add your printer to the network. To add the printer to the network, enter the port name and the IP address for the printer.
- To find a shared network printer (UNC Path), select **Shared Printer [UNC]** and enter the shared name manually or find a shared printer by clicking the **Browse** button.

6 After the installation is finished, a window appears asking you to print a test page and to register yourself as a user of Samsung Printers in order to receive information from Samsung. If you so desire, select the corresponding checkbox(es) and click **Finish**.

Otherwise, just click **Finish**.

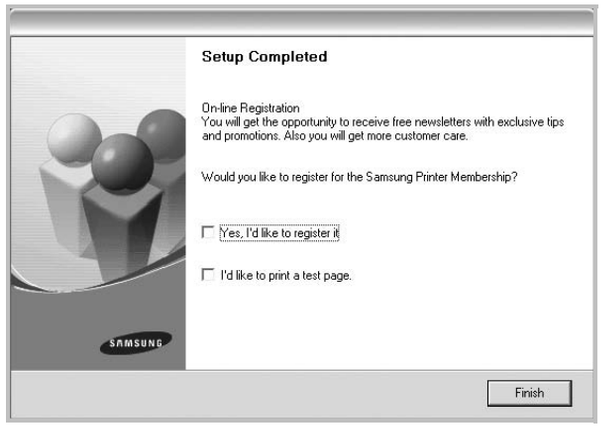

NOTE: After setup is complete, if your printer driver doesn't work properly, reinstall the printer driver. See "Reinstalling Printer Software" on page 10.

Custom Installation

You can choose individual components to install and set a specific IP address.

1 Make sure that the printer is connected to your network and powered on. For details about connecting to the network, see the supplied printer's User's Guide.

2 Insert the supplied CD-ROM into your CD-ROM drive.
If you use Windows Vista, Windows 7 and Windows Server 2008 R2, when you are asked to allow the installation, click **continue**.

The CD-ROM should automatically run, and an installation window appears.

If the installation window does not appear, click **Start** and then **Run**. Type **X:\Setup.exe**, replacing "**X**" with the letter which represents your drive and click **OK**.
If you use Windows Vista, Windows 7 and Windows Server 2008 R2, click **Start** → **All Programs** → **Accessories** → **Run**, and type **X:\Setup.exe**.

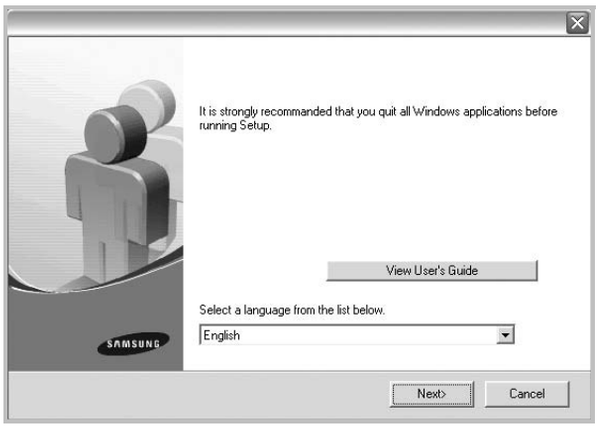

3 Click **Next**.

- If necessary, select a language from the drop-down list.
- **View User's Guide**: Allows you to view the User's Guide. If your computer doesn't have Adobe Acrobat, click on this option and it will automatically install Adobe Acrobat Reader for you.

4 Select **Custom installation**. Click **Next**.

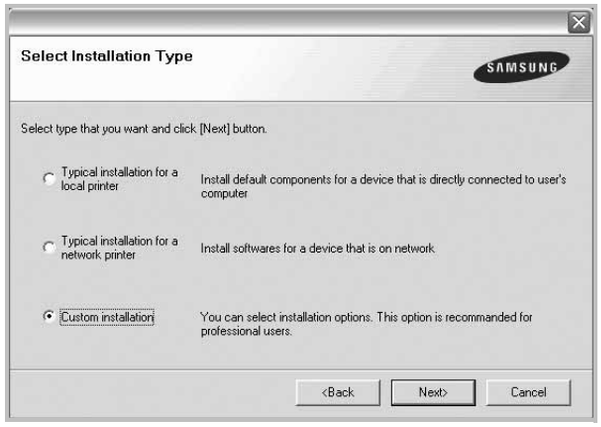

5 The list of printers available on the network appears. Select the printer you want to install from the list and then click **Next**.

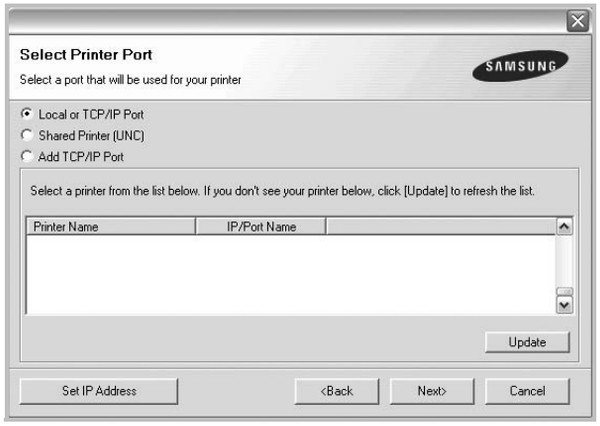

- If you do not see your printer on the list, click **Update** to refresh the list, or select **Add TCP/IP Port** to add your printer to the network. To add the printer to the network, enter the port name and the IP address for the printer.
- To find a shared network printer (UNC Path), select **Shared Printer [UNC]** and enter the shared name manually or find a shared printer by clicking the **Browse** button.

TIP: If you want to set a specific IP address on a specific network printer, click the **Set IP Address** button. The Set IP Address window appears. Do as follows:

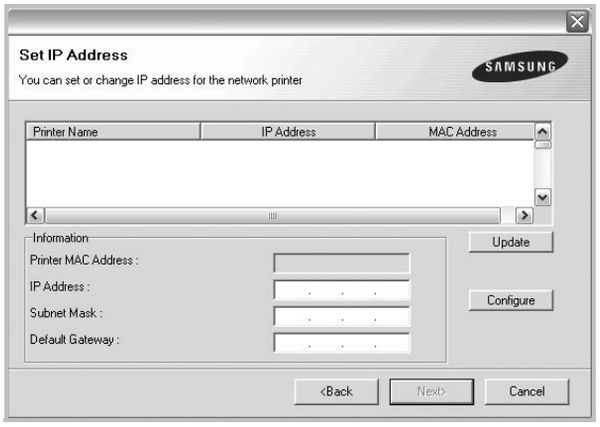

a. Select a printer to be set with a specific IP address from the list. To verify your printer's IP address or MAC address, print a Network Configuration page.
b. Configure an IP address, subnet mask, and gateway for the printer manually and click **Configure** to set the specific IP address for the network printer.
c. Click **Next**.

6 Select the components to be installed. After selecting the components, the following window appears. You can also change the printer name, set the printer to be shared on the network, set the printer as the default printer, and change the port name of each printer. Click **Next**.

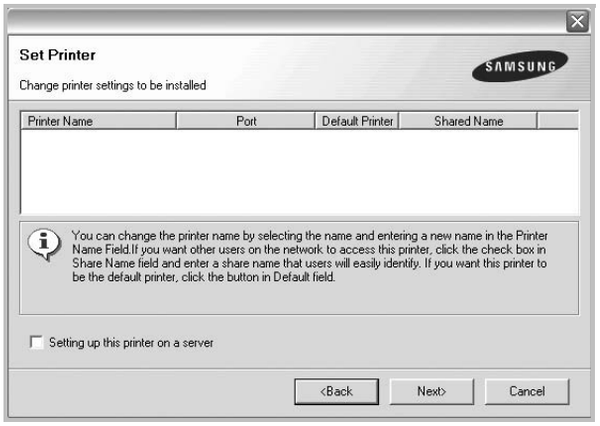

To install this software on a server, select the **Setting up this printer on a server** checkbox.

7 After the installation is finished, a window appears asking you to print a test page and to register yourself as a user of Samsung Printers in order to receive information from Samsung. If you so desire, select the corresponding checkbox(es) and click **Finish**.

Otherwise, just click **Finish**.

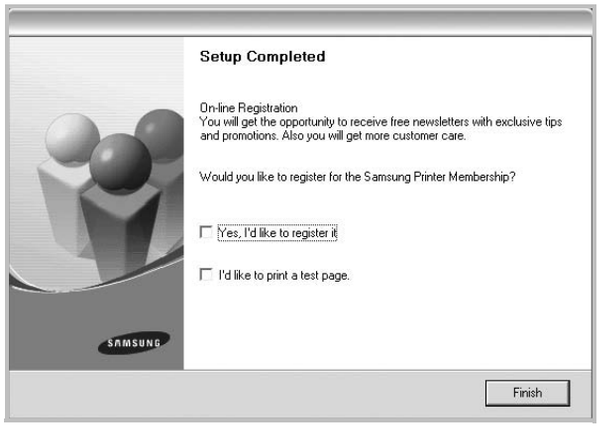

NOTE: After setup is complete, if your printer driver doesn't work properly, reinstall the printer driver. See "Reinstalling Printer Software" on page 10.

Reinstalling Printer Software

You can reinstall the software if installation fails.

1 Start Windows.

2 From the **Start** menu select **Programs** or **All Programs** → **your printer driver name** → **Maintenance**.

3 Select **Repair** and click **Next**.

4 The list of printers available on the network appears. Select the printer you want to install from the list and then click **Next**.

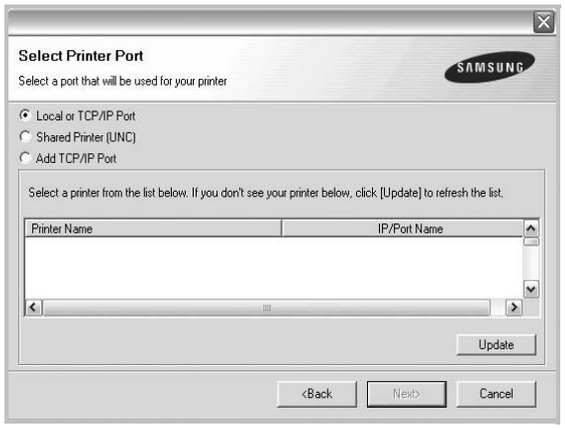

- If you do not see your printer on the list, click **Update** to refresh the list, or select **Add TCP/IP Port** to add your printer to the network. To add the printer to the network, enter the port name and the IP address for the printer.
- To find a shared network printer (UNC Path), select **Shared Printer [UNC]** and enter the shared name manually or find a shared printer by clicking the **Browse** button.

You will see a component list so that you can reinstall any item individually.

NOTE: If your printer is not already connected to the computer, the following window will appear.

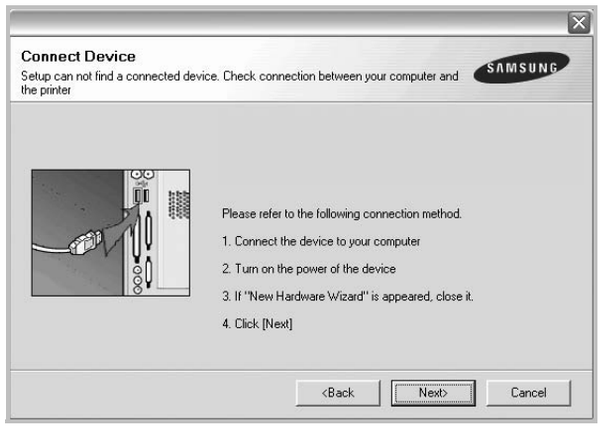

- After connecting the printer, click **Next**.
- If you don't want to connect the printer at this time, click **Next**, and **No** on the following screen. Then the installation will start and a test page will not be printed at the end of the installation.
- ***The reinstallation window that appears in this User's Guide may differ depending on the printer and interface in use.***

5 Select the components you want to reinstall and click **Next**.

If you installed the printer software for local printing and you select **your printer driver name**, the window asking you to print a test page appears. Do as follows:

a. To print a test page, select the check box and click **Next**.

b. If the test page prints out correctly, click **Yes**.

If it doesn't, click **No** to reprint it.

6 When the reinstallation is done, click **Finish**.

Removing Printer Software

1. Start Windows.
2. From the **Start** menu select **Programs** or **All Programs** → **your printer driver name** → **Maintenance**.
3. Select **Remove** and click **Next**.

   You will see a component list so that you can remove any item individually.
4. Select the components you want to remove and then click **Next**.
5. When your computer asks you to confirm your selection, click **Yes**.

   The selected driver and all of its components are removed from your computer.
6. After the software is removed, click **Finish**.

2 Basic Printing

This chapter explains the printing options and common printing tasks in Windows.

This chapter includes:

- **Printing a Document**
- **Printer Settings**
  - **Layout Tab**
  - **Paper Tab**
  - **Graphics Tab**
  - **Extras Tab**
  - **About Tab**
  - **Printer Tab**
  - **Using a Favorite Setting**
  - **Using Help**

Printing a Document

NOTES:

- Your printer driver **Properties** window that appears in this User's Guide may differ depending on the printer in use. However the composition of the printer properties window is similar.
- ***Check the Operating System(s) that are compatible with your printer. Please refer to the OS Compatibility section of Printer Specifications in your Printer User's Guide.***
- If you need to know the exact name of your printer, you can check the supplied CD-ROM.

The following procedure describes the general steps required for printing from various Windows applications. The exact steps for printing a document may vary depending on the application program you are using. Refer to the User's Guide of your software application for the exact printing procedure.

1. Open the document you want to print.
2. Select **Print** from the **File** menu. The Print window is displayed. It may look slightly different depending on your application.

   The basic print settings are selected within the Print window. These settings include the number of copies and print range.

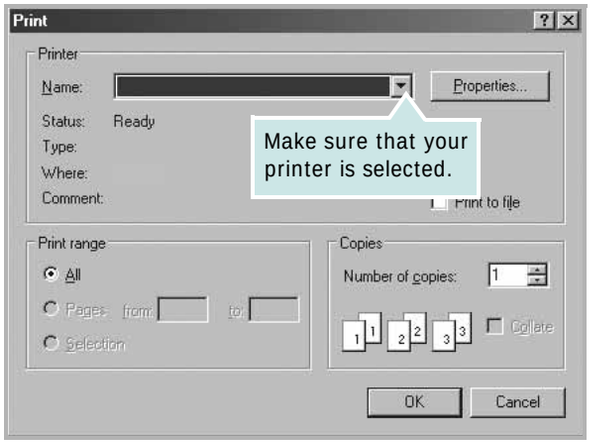

3. Select **your printer driver** from the **Name** drop-down list.
4. To take advantage of the printer features provided by your printer driver, click **Properties** or **Preferences** in the application's Print window. For details, see "Printer Settings" on page 13.

   If you see **Setup**, **Printer**, or **Options** in your Print window, click it instead. Then click **Properties** on the next screen.
5. Click **OK** to close the printer properties window.
6. To start the print job, click **OK** or **Print** in the Print window.

Printer Settings

You can use the printer properties window, which allows you to access all of the printer options you need when using your printer. When the printer properties are displayed, you can review and change the settings needed for your print job.

Your printer properties window may differ, depending on your operating system. This Software User's Guide shows the Properties window for Windows XP.

Your printer driver **Properties** window that appears in this User's Guide may differ depending on the printer in use.

If you access printer properties through the Printers folder, you can view additional Windows-based tabs (refer to your Windows User's Guide) and the Printer tab (see "Printer Tab" on page 17).

NOTES:

- Most Windows applications will override settings you specify in the printer driver. Change all print settings available in the software application first, and change any remaining settings using the printer driver.
- The settings you change remain in effect only while you are using the current program. **To make your changes permanent**, make them in the Printers folder.
- The following procedure is for Windows XP. For other Windows OS, refer to the corresponding Windows User's Guide or online help.
  1. Click the Windows **Start** button.
  2. Select **Printers and Faxes**.
  3. Select **your printer driver icon**.
  4. Right-click on the printer driver icon and select **Printing Preferences**.
  5. Change the settings on each tab, click OK.

Layout Tab

The **Layout** tab provides options to adjust how the document appears on the printed page. The **Layout Options** includes **Multiple Pages per Side** and **Poster Printing**. See "Printing a Document" on page 12 for more information on accessing printer properties.

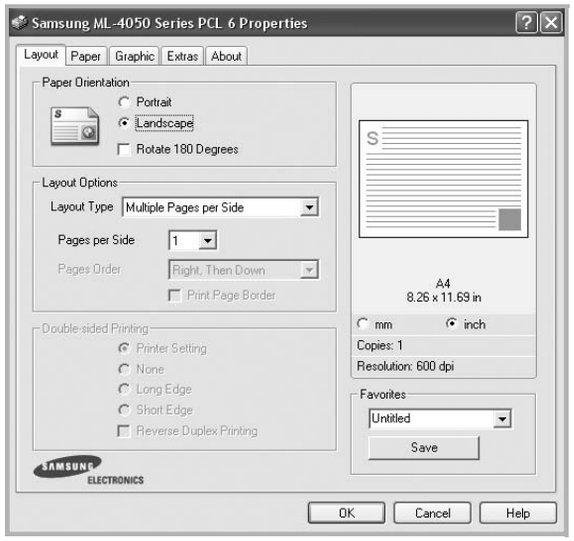

Paper Orientation

Paper Orientation allows you to select the direction in which information is printed on a page.

- **Portrait** prints across the width of the page, letter style.
- **Landscape** prints across the length of the page, spreadsheet style.
- **Rotate 180 Degrees** allows you to rotate the page, 180 degrees.

▲ Portrait

▲ Landscape

Layout Options

Layout Options allows you to select advanced printing options. You can choose **Multiple Pages per Side** and **Poster Printing**.

- For details, see "Printing Multiple Pages on One Sheet of Paper (N-Up Printing)" on page 18.
- For details, see "Printing Posters" on page 19

Double-sided Printing

Double-sided Printing allows you to print on both sides of paper. ***If this option does not appear, your printer does not have this feature.***

- For details, see "Printing on Both Sides of Paper" on page 20.

Paper Tab

Use the following options to set the basic paper handling specifications when you access the printer properties. See “Printing a Document” on page 12 for more information on accessing printer properties.

Click the **Paper** tab to access various paper properties.

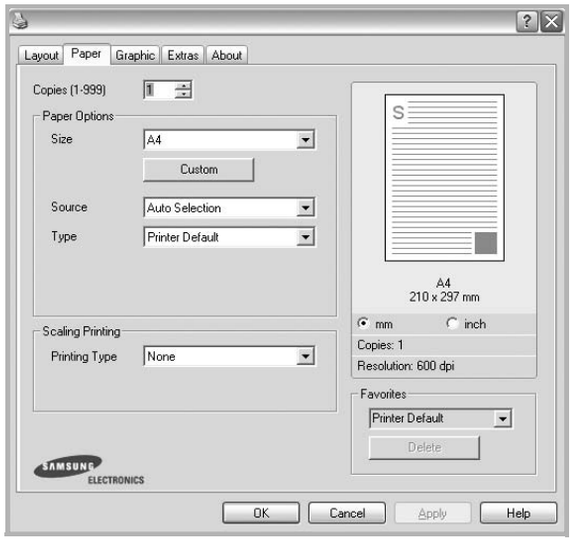

Copies

Copies allows you to choose the number of copies to be printed. You can select 1 to 999 copies.

Size

Size allows you to set the size of paper you loaded in the tray. If the required size is not listed in the **Size** box, click **Custom**. When the **Custom Paper Setting** window appears, set the paper size and click **OK**. The setting appears in the list so that you can select it.

Source

Make sure that **Source** is set to the corresponding paper tray. Use **Manual Feeder** when printing on special materials like envelopes and transparencies. You have to load one sheet at a time into the Manual Tray or Multi-Purpose Tray.
If the paper source is set to **Auto Selection**, the printer automatically picks up print material in the following tray order: Manual Tray or Multi-Purpose Tray, Tray n.

Type

Set **Type** to correspond to the paper loaded in the tray from which you want to print. This will let you get the best quality printout. If not, print quality may not be acheived as you want.
Cotton: 20 lb to 24 lb (75~90 g/m2) cotton paper such as Gilbert 25 % and Gilbert 100 %.
Plain Paper: Normal plain paper. Select this type if your printer is monochrome and printing on the 16 lb (60 g/m2) cotton paper.
Recycled Paper: 20 lb to 24 lb (75~90 g/m2) recycled paper.
Color Paper: 20 lb to 24 lb (75~90 g/m2) color-backgrounded paper.

First Page

This property allows you to print the first page using a different paper type from the rest of the document. You can select the paper source for the first page.
For example, load thick stock for the first page into the Multi-purpose Tray, and plain paper into Tray n. Then, select **Tray n** in the **Source** option and **Multi-Purpose Tray** in the **First Page** option. ***Some printers do not support this feature.***

Scaling Printing

Scaling Printing allows you to automatically or manually scale your print job on a page. You can choose from **None**, **Reduce/ Enlarge**, and **Fit to Page**.

- For details, see “Printing a Reduced or Enlarged Document” on page 20.
- For details, see “Fitting Your Document to a Selected Paper Size” on page 20.

Graphics Tab

Use the following Graphic options to adjust the print quality for your specific printing needs. See “Printing a Document” on page 12 for more information on accessing printer properties.

Click the **Graphic** tab to display the properties shown below..

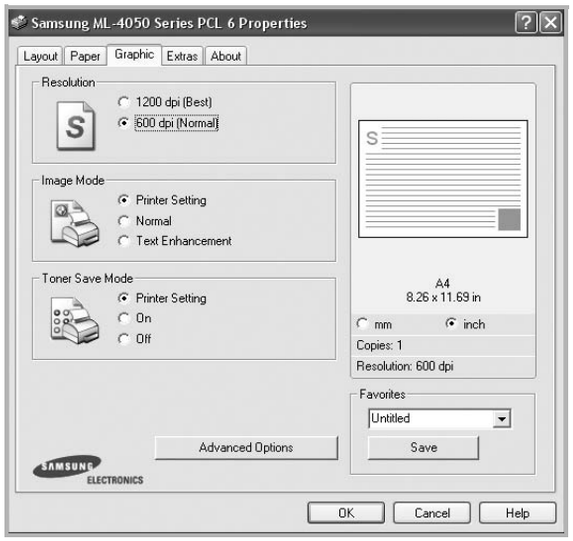

Resolution

The Resolution options you can select may vary depending on your printer model. The higher the setting, the sharper the clarity of printed characters and graphics. The higher setting also may increase the time it takes to print a document.

Image Mode

The available options are Normal and Text Enhance. ***Some printers do not support this feature.***

- **Printer Setting**: If you select this option, this feature is determined by the setting you’ve made on the control panel of the printer.
- **Normal**: This setting is for normal documents.
- **Text Enhancement**: Image Mode allows the user to enhance printouts.

Toner Save Mode

Selecting this option extends the life of your toner cartridge and reduces your cost per page without a significant reduction in print quality. ***Some printers do not support this feature.***

- **Printer Setting**: If you select this option, this feature is determined by the setting you’ve made on the control panel of the printer.
- **On**: Select this option to allow the printer to use less toner on each page.
- **Off**: If you don’t need to save toner when printing a document, select this option.

Advanced Options

You can set advanced settings by clicking the **Advanced Options** button.

- **TrueType Options**: This option determines what the driver tells the printer about how to image the text in your document. Select the appropriate setting according to the status of your document. ***This option may be available only in Windows 9x/Me, depending on your particular printer model.***
  - **Download as Outline**: When this option is selected, the driver will download any TrueType fonts that are used in your document not already stored (resident) on your printer. If, after printing a document, you find that the fonts did not print correctly, choose Download as bit image and resubmit your print job. The Download as bit image setting is often useful when printing Adobe. ***This feature is available only when you use the PCL printer driver.***
  - **Download as Bitmap**: When this option is selected, the driver will download the font data as bitmap images. Documents with complicated fonts, such as Korean or Chinese, or various other fonts, will print faster in this setting.
  - **Print as Graphics**: When this option is selected, the driver will download any fonts as graphics. When printing documents with high graphic content and relatively few TrueType fonts, printing performance (speed) may be enhanced in this setting.
- **Print All Text To Black**: When the **Print All Text To Black** option is checked, all text in your document prints solid black, regardless of the color it appears on the screen.

Extras Tab

You can select output options for your document. See “Printing a Document” on page 12 for more information about accessing the printer properties.

Click the **Extras** tab to access the following feature:

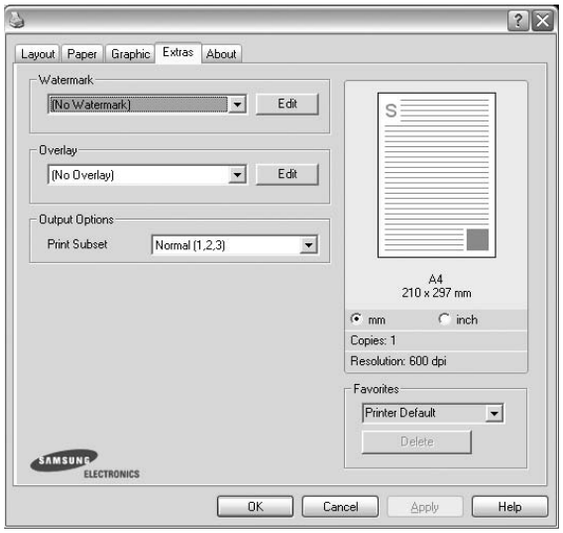

Watermark

You can create a background text image to be printed on each page of your document. For details, see “Using Watermarks” on page 21.

Overlay

Overlays are often used to take the place of preprinted forms and letterhead paper. For details, see “Using Overlays” on page 22.

Output Options

- **Print Subset**: You can set the sequence in which the pages print. Select the print order from the drop-down list.
  - **Normal(1,2,3)**: Your printer prints all pages from the first page to the last page.
  - **Reverse All Pages(3,2,1)**: Your printer prints all pages from the last page to the first page.
  - **Print Odd Pages**: Your printer prints only the odd numbered pages of the document.
  - **Print Even Pages**: Your printer prints only the even numbered pages of the document.
- **Information Page**: Select Banner Page to print a banner sheet containing the printer name, the network user ID, job name before printing the document. When several users send a print job to the printer, this option allows you to easily find your printing from the output tray. ***Some printers do not support this feature.***
- **Use Printer Fonts**: When Use Printer Fonts is checked, the printer uses the fonts that are stored in its memory (resident fonts) to print your document, rather than downloading the fonts used in your document. Because downloading fonts takes time, selecting this option can speed up your printing time. When using Printer fonts, the printer will try to match the fonts used in your document to those stored in its memory. If, however, you use fonts in your document that are very different from those resident in the printer, your printed output will appear very different from what it looks like on the screen. ***This feature is available only when you use the PCL printer driver.***
- **Save as Form for Overlay**: Select Save as Form for Overlay to save the document as a form file (C:\FORMOVER*.FOM). Once this option is selected, the printer driver requires the file name and the destination path each time you print. If you want to preset the file name and specify the path, click on the button in the Output to area, and type the file name and specify the path. ***This feature is available only when you use the PCL printer driver.***

Job Setting

Print and Hold dialog allows you to select how to print or save the printing file by using the optional HDD. ***Some printers do not support this feature.***

Using Onscreen Help File

- For more information about **Job Setting**, click ? at the top right corner of the window. The **Job Setting** Help window opens and allows you to view onscreen help supplied on the **Job Setting**.

About Tab

Use the **About** tab to display the copyright notice and the version number of the driver. If you have an Internet browser, you can connect to the Internet by clicking on the web site icon. See “Printing a Document” on page 12 for more information about accessing printer properties.

Printer Tab

If you access printer properties through the **Printers** folder, you can view the **Printer** tab. You can set the printer configuration.

The following procedure is for Windows XP. For other Windows OS, refer to the corresponding Windows User's Guide or online help.

1. Click the Windows **Start** menu.
2. Select **Printers and Faxes**.
3. Select **your printer driver** icon.
4. Right-click on the printer driver icon and select **Properties**.
5. Click the **Printer** tab and set the options.

Using a Favorite Setting

The **Favorites** option, which is visible on each properties tab, allows you to save the current properties settings for future use.

To save a **Favorites** item:

1. Change the settings as needed on each tab.
2. Enter a name for the item in the **Favorites** input box.

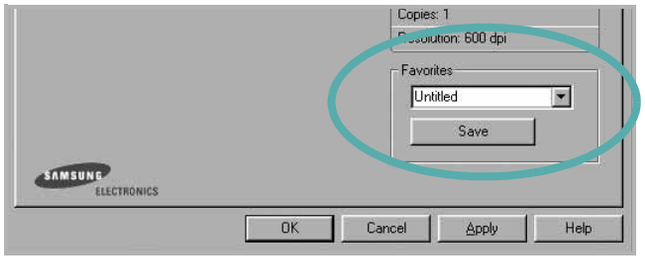

3. Click **Save**.

   When you save **Favorites**, all current driver settings are saved.

To use a saved setting, select the item from the **Favorites** drop down list. The printer is now set to print according to the Favorites setting you selected.

To delete a Favorites item, select it from the list and click **Delete**.

You can also restore the printer driver’s default settings by selecting **Printer Default** from the list.

Using Help

Your printer has a help screen that can be activated by clicking the **Help** button in the printer properties window. These help screens give detailed information about the printer features provided by the printer driver.

You can also click ? from the upper right corner of the window, and then click on any setting.

3 Advanced Printing

This chapter explains printing options and advanced printing tasks.

NOTE:

- Your printer driver **Properties** window that appears in this User's Guide may differ depending on the printer in use. However the composition of the printer properties window is similar.
- If you need to know the exact name of your printer, you can check the supplied CD-ROM.

This chapter includes:

- **Printing Multiple Pages on One Sheet of Paper (N-Up Printing)**
- **Printing Posters**
- **Printing Booklets**
- **Printing on Both Sides of Paper**
- **Printing a Reduced or Enlarged Document**
- **Fitting Your Document to a Selected Paper Size**
- **Using Watermarks**
- **Using Overlays**

Printing Multiple Pages on One Sheet of Paper (N-Up Printing)

You can select the number of pages to print on a single sheet of paper. To print more than one page per sheet, the pages will be reduced in size and arranged in the order you specify. You can print up to 16 pages on one sheet.

1. To change the print settings from your software application, access printer properties. See "Printing a Document" on page 12.
2. From the **Layout** tab, choose **Multiple Pages per Side** in the **Layout Type** drop-down list.
3. Select the number of pages you want to print per sheet (1, 2, 4, 6, 9, or 16) in the **Pages per Side** drop-down list.
4. Select the page order from the **Page Order** drop-down list, if necessary.

   Check **Print Page Border** to print a border around each page on the sheet.
5. Click the **Paper** tab, select the paper source, size, and type.
6. Click **OK** and print the document.

Printing Posters

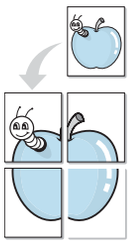

This feature allows you to print a single-page document onto 4, 9, or 16 sheets of paper, for the purpose of pasting the sheets together to form one poster-size document.

1. To change the print settings from your software application, access printer properties. See “Printing a Document” on page 12.
2. Click the **Layout** tab, select **Poster Printing** in the **Layout Type** drop-down list.
3. Configure the poster option:

   You can select the page layout from **Poster<2x2>**, **Poster<3x3>**, or **Poster<4x4>**. If you select **Poster<2x2>**, the output will be automatically stretched to cover 4 physical pages.

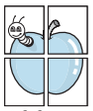

▲ 2x2

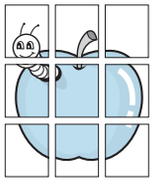

▲ 3x3

   Specify an overlap in millimeters or inches to make it easier to pasting the sheets together.

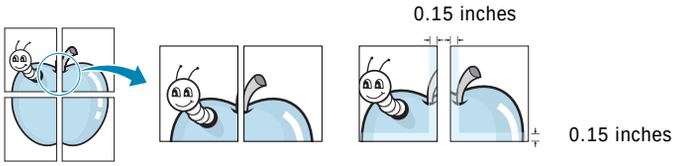

4. Click the **Paper** tab, select the paper source, size, and type.
5. Click **OK** and print the document. You can complete the poster by pasting the sheets together.

Printing Booklets

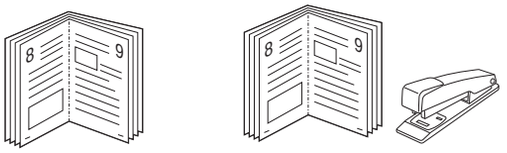

This printer feature allows you to print your document on both sides of the paper and arranges the pages so that the paper can be folded in half after printing to produce a booklet.

1. To change the print settings from your software application, access the printer properties. See “Printing a Document” on page 12.
2. From the **Layout** tab, choose **Booklet Printing** from the **Type** drop-down list.

NOTE: The booklet printing option is available when A4, Letter, Legal, or Folio size is selected in the **Size** option on the **Paper** tab.

3. Click the **Paper** tab, and select the paper source, size, and type.
4. Click **OK** and print the document.
5. After printing, fold and staple the pages.

Printing on Both Sides of Paper

You can print on both sides of a sheet of paper. Before printing, decide how you want your document oriented.

The options are:

- **Printer Setting**, if you select this option, this feature is determined by the setting you've made on the control panel of the printer. ***If this option does not appear, your printer does not have this feature.***
- **None**
- **Long Edge**, which is the conventional layout used in book binding.
- **Short Edge**, which is the type often used with calendars.

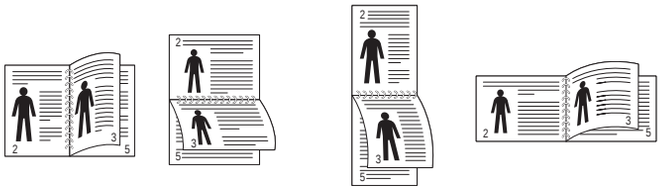

Long Edge

Short Edge

- **Reverse Duplex**, allows you to select general print order compare to duplex print order. ***If this option does not appear, your printer does not have this feature.***

NOTE:

- Do not print on both sides of labels, transparencies, envelopes, or thick paper. Paper jamming and damage to the printer may result.
- To use double-sided printing, you can use only the following paper sizes: A4, Letter, Legal, and Folio, with a weight of 20~24 lbs (75~90 g/m²).

1. To change the print settings from your software application, access printer properties. "Printing a Document" on page 12.
2. From the **Layout** tab, select the paper orientation.
3. From the **Double-sided Printing** section, select the binding option you want.
4. Click the **Paper** tab and select the paper source, size, and type.
5. Click **OK** and print the document.

NOTE: If your printer does not have a duplex unit, you should complete the printing job manually. The printer prints every other page of the document first. After printing the first side of your job, the Printing Tip window appears. Follow the on-screen instructions to complete the printing job.

Printing a Reduced or Enlarged Document

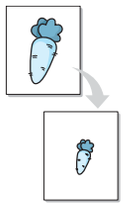

You can change the size of a page's content to appear larger or smaller on the printed page.

1. To change the print settings from your software application, access printer properties. See "Printing a Document" on page 12.
2. From the **Paper** tab, select **Reduce/Enlarge** in the **Printing Type** drop-down list.
3. Enter the scaling rate in the **Percentage** input box.

   You can also click the ▼ or ▲ button.
4. Select the paper source, size, and type in **Paper Options**.
5. Click **OK** and print the document.

Fitting Your Document to a Selected Paper Size

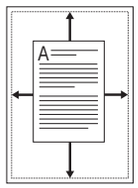

This printer feature allows you to scale your print job to any selected paper size regardless of the digital document size. This can be useful when you want to check fine details on a small document.

1. To change the print settings from your software application, access printer properties. See "Printing a Document" on page 12.
2. From the **Paper** tab, select **Fit to Page** in the **Printing Type** drop-down list.
3. Select the correct size from the **Target Page** drop-down list.
4. Select the paper source, size, and type in **Paper Options**.
5. Click **OK** and print the document.

Using Watermarks

The Watermark option allows you to print text over an existing document. For example, you may want to have large gray letters reading “DRAFT” or “CONFIDENTIAL” printed diagonally across the first page or all pages of a document.

There are several predefined watermarks that come with the printer, and they can be modified, or you can add new ones to the list.

Using an Existing Watermark

1. To change the print settings from your software application, access printer properties. See “Printing a Document” on page 12.
2. Click the **Extras** tab, and select the desired watermark from the **Watermark** drop-down list. You will see the selected watermark in the preview image.
3. Click **OK** and start printing.

NOTE: The preview image shows how the page will look when it is printed.

Creating a Watermark

1. To change the print settings from your software application, access printer properties. See “Printing a Document” on page 12.
2. Click the **Extras** tab, and click the **Edit** button in the **Watermark** section. The **Edit Watermark** window appears.
3. Enter a text message in the **Watermark Message** box. You can enter up to 40 characters. The message displays in the preview window.

   When the **First Page Only** box is checked, the watermark prints on the first page only.
4. Select watermark options.

   You can select the font name, style, size, or grayscale level from the **Font Attributes** section and set the angle of the watermark from the **Message Angle** section.
5. Click **Add** to add a new watermark to the list.
6. When you have finished editing, click **OK** and start printing.

To stop printing the watermark, select **<No Watermark>** from the **Watermark** drop-down list.

Editing a Watermark

1. To change the print settings from your software application, access printer properties. See “Printing a Document” on page 12.
2. Click the **Extras** tab and click the **Edit** button in the **Watermark** section. The **Edit Watermark** window appears.
3. Select the watermark you want to edit from the **Current Watermarks** list and change the watermark message and options.
4. Click **Update** to save the changes.
5. Click **OK** until you exit the Print window.

Deleting a Watermark

1. To change the print settings from your software application, access printer properties. See “Printing a Document” on page 12.
2. From the **Extras** tab, click the **Edit** button in the Watermark section. The **Edit Watermark** window appears.
3. Select the watermark you want to delete from the **Current Watermarks** list and click **Delete**.
4. Click **OK** until you exit the Print window.

Using Overlays

What is an Overlay?

An overlay is text and/or images stored in the computer hard disk drive (HDD) as a special file format that can be printed on any document. Overlays are often used to take the place of preprinted forms and letterhead paper. Rather than using preprinted letterhead, you can create an overlay containing the exact same information that is currently on your letterhead. To print a letter with your company's letterhead, you do not need to load preprinted letterhead paper in the printer. You need only tell the printer to print the letterhead overlay on your document.

Creating a New Page Overlay

To use a page overlay, you must create a new page overlay containing your logo or image.

1. Create or open a document containing text or an image for use in a new page overlay. Position the items exactly as you wish them to appear when printed as an overlay.
2. To save the document as an overlay, access printer properties. See "Printing a Document" on page 12.
3. Click the **Extras** tab, and click **Edit** button in the **Overlay** section.
4. In the Edit Overlay window, click **Create Overlay**.
5. In the Create Overlay window, type a name of up to eight characters in the **File name** box. Select the destination path, if necessary. (The default is C:\Formover).
6. Click **Save**. The name appears on the **Overlay List** box.
7. Click **OK** or **Yes** to finish creating.

   The file is not printed. Instead it is stored on your computer hard disk drive.

NOTE: The overlay document size must be the same as the documents you print with the overlay. Do not create an overlay with a watermark.

Using a Page Overlay

After an overlay has been created, it is ready to be printed with your document. To print an overlay with a document:

1. Create or open the document you want to print.
2. To change the print settings from your software application, access printer properties. See "Printing a Document" on page 12.
3. Click the **Extras** tab.
4. Select the desired overlay from the **Overlay** drop-down list box.
5. If the overlay file you want does not appear in the **Overlay** list, click **Edit** button and **Load Overlay**, and select the overlay file.

   If you have stored the overlay file you want to use in an external source, you can also load the file when you access the **Load Overlay** window.

   After you select the file, click **Open**. The file appears in the **Overlay List** box and is available for printing. Select the overlay from the **Overlay List** box.
6. If necessary, click **Confirm Page Overlay When Printing**. If this box is checked, a message window appears each time you submit a document for printing, asking you to confirm your wish to print an overlay on your document.

   If this box is not checked and an overlay has been selected, the overlay automatically prints with your document.
7. Click **OK** or **Yes** until printing begins.

   The selected overlay downloads with your print job and prints on your document.

NOTE: The resolution of the overlay document must be the same as that of the document you will print with the overlay.

Deleting a Page Overlay

You can delete page overlays that you no longer use.

1. In the printer properties window, click the **Extras** tab.
2. Click the **Edit** button in the **Overlay** section.
3. Select the overlay you want to delete from the **Overlay List** box.
4. Click **Delete Overlay**.
5. When a confirming message window appears, click **Yes**.
6. Click **OK** until you exit the Print window.

4 Using Windows PostScript Driver

If you want to use the PostScript driver provided with your system CD-ROM to print a document.

PPDs, in combination with the PostScript driver, access printer features and allow the computer to communicate with the printer. An installation program for the PPDs is provided on the supplied software CD-ROM.

This chapter includes:

Printer Settings

You can use the printer properties window, which allows you to access all of the printer options you need when using your printer. When the printer properties are displayed, you can review and change the settings needed for your print job.

Your printer properties window may differ, depending on your operating system. This Software User's Guide shows the Properties window for Windows XP.

Your printer driver **Properties** window that appears in this User's Guide may differ depending on the printer in use.

NOTES:

- Most Windows applications will override settings you specify in the printer driver. Change all print settings available in the software application first, and change any remaining settings using the printer driver.
- The settings you change remain in effect only while you are using the current program. **To make your changes permanent**, make them in the Printers folder.
- The following procedure is for Windows XP. For other Windows OS, refer to the corresponding Windows User's Guide or online help.
  1. Click the Windows **Start** button.
  2. Select **Printers and Faxes**.
  3. Select **your printer driver icon**.
  4. Right-click on the printer driver icon and select **Printing Preferences**.
  5. Change the settings on each tab, click OK.

Advanced

You can use advanced settings by clicking the **Advanced** button.

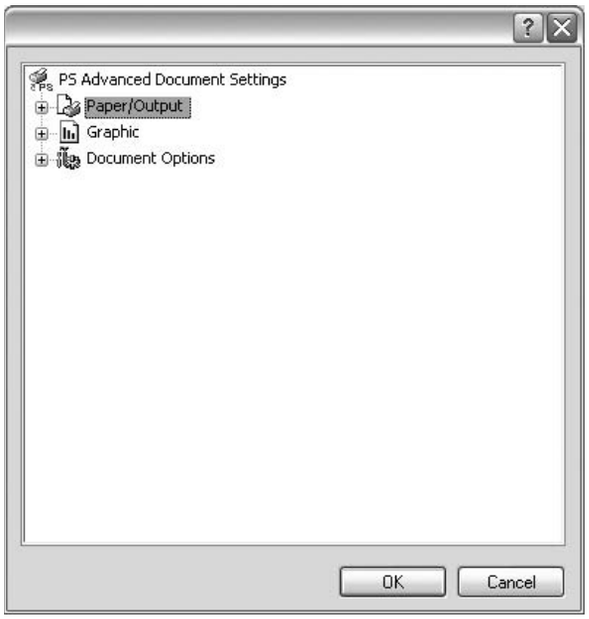

- **Paper/Output** this option allows you to select the size of the paper loaded in the tray.
- **Graphic** this option allows you to adjust the print quality for your specific printing needs.
- **Document Options** this options allow you to set the PostScript options or printer features.

Using Help

You can click ? from the upper right corner of the window, and then click on any setting.

5 Using Direct Print Utility

This chapter explains how to use Direct Print Utility to print PDF files without having to open the files.

CAUTION

- You can not print PDF files that are restricted to print. Deactivate the printing restriction feature, and retry printing.
- You can not print PDF files that are restricted by a password. Deactivate the password feature, and retry printing.
- Depending on how a PDF file was created, it may not be able to be printed using the **Direct Print Utility** program.
- Depending on the memory size supported by your printer, PDF files can not be printed using the **Direct Print Utility** program. Expand the memory.
- The **Direct Print Utility** program supports PDF version 1.4 and below. For a higher version, you must open the file to print it.

Overview Direct Print Utility

Direct Print Utility is a program that sends a PDF file directly to your printer without having to open the file. It sends data through the Windows spooler using the port of the printer driver. It only supports PDF format.

To installing this program, you should select **Custom** and put a check mark in this program when you install the printer driver.

Printing

There are several ways you can print using Direct Print Utility.

From the Direct Print Utility window

1. From the **Start** menu select **Programs** or **All Programs** → **Direct Print Utility** → **Direct Print Utility**.

   Or, double-click the Direct Print Utility shortcut icon on your desk top.

   The Direct Print Utility window opens.
2. Select the printer you will use in the Select Printer section and click **Browse**.
3. Select the PDF file you will print and click **Open**.

   The PDF file is added in the Select Files section.
4. Customize the printer settings for your needs. See the next column.
5. Click **Print**.

   The selected PDF file is sent to the printer.

Using the shortcut icon

1. Select the PDF file you will print and by dragging drop it to the Direct Print Utility shortcut icon on your desk top.

   The selected PDF file is sent to the default printer.

NOTE : If the default printer does not support Direct Print Utility, the message window alerting you to select the appropriate printer opens. Select the appropriate printer in the Select Printer section.

2. Customize the printer settings for your needs.
3. Click **Print**.

   The selected PDF file is sent to the printer.

Using the right-click menu

1. Right-click on the PDF file you will print and select **Direct Printing**.

   The Direct Print Utility window opens with the PDF file is added.
2. Select the printer you will use.
3. Customize the printer settings for your needs. See the below part.
4. Click **Print**.

   The selected PDF file is sent to the printer.

6 Sharing the Printer Locally

You can connect the printer directly to a selected computer, which is called “host computer,” on the network.

The following procedure is for Windows XP. For other Windows OS, refer to the corresponding Windows User's Guide or online help.

NOTES:
- Check the Operating System(s) that are compatible with your printer. Please refer to the OS Compatibility section of Printer Specifications in your Printer User’s Guide.
- If you need to know the exact name of your printer, you can check the supplied CD-ROM.

Setting Up a Host Computer

1. Start Windows.
2. From the **Start** menu select **Printers and Faxes**.
3. Double-click **your printer driver icon**.
4. From the **Printer** menu, select **Sharing**.
5. Check the **Share this printer** box.
6. Fill in the **Shared Name** field, and then click **OK**.

Setting Up a Client Computer

1. Right-click the Windows **Start** button and select **Explorer**.
2. Open your network folder in the left column.
3. Click the shared name.
4. From the **Start** menu select **Printers and Faxes**.
5. Double-click **your printer driver icon**.
6. From the **Printer** menu, select **Properties**.
7. From the **Ports** tab, click **Add Port**.
8. Select **Local Port** and click **New Port**.
9. Fill in the **Enter a port name** field with the shared name.
10. Click **OK** and click **Close**.
11. Click **Apply** and click **OK**.

7 Using Smart Panel

Smart Panel is a program that monitors and informs you of the status of the printer, and allows you to customize the printer's settings. If you are a Windows or Macintosh OS user, Smart Panel is installed automatically when you install the printer software. If you are a Linux OS user, download Smart Panel from the Samsung website (www.samsung.com/printer) and install.

NOTES:

- To use this program, you need:
  - Windows 98 or higher (Windows NT 4.0 can be used only for network-supported printers.) To check for Operating System(s) that are compatible with your printer, refer to Printer Specifications in your Printer User's Guide.
  - Mac OS X 10.3 or higher
  - Linux. To check for Linux systems that are compatible with your printer, refer to Printer Specifications in your Printer User's Guide.
  - Internet Explorer version 5.0 or higher for flash animation in HTML Help.
- If you need to know the exact name of your printer, you can check the supplied CD-ROM.

Understanding Smart Panel

If an error occurs while printing, Smart Panel appears automatically, showing the error.

You can also launch Smart Panel manually. Double-click the Smart Panel icon on the Windows task bar (in Windows), or Notification Area (in Linux). You can also click it on the status bar (in Mac OS X).

Double-click this icon in Windows.

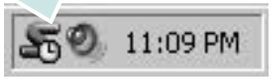

Click this icon in Mac OS X.

Click this icon in Linux.

If you are a Windows user, from the **Start** menu, select **Programs** or **All Programs** → **your printer driver name** → **Smart Panel**.

NOTES:

- If you have already installed more than one Samsung printer, first select the printer model you want in order to use the corresponding Smart Panel. Right-click (in Windows or Linux) or click (in Mac OS X) the Smart Panel icon and select **your printer name**.
- The Smart Panel window and its contents shown in this Software User's Guide may differ depending on the printer or Operating System in use.

The Smart Panel program displays the current status of the printer, the level of toner remaining in the toner cartridge(s) and various other information. You can also change settings.

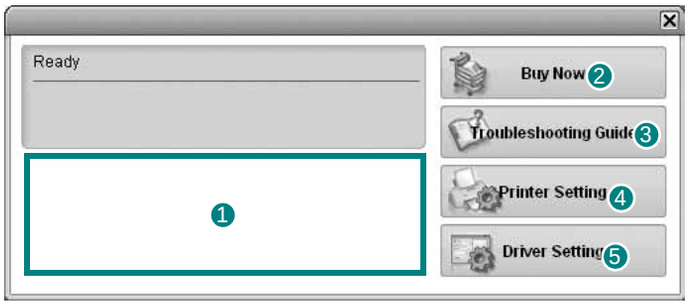

❶ Toner Level

You can view the level of toner remaining in the toner cartridge(s). The printer and the number of toner cartridge(s) shown in the above window may differ depending on the printer in use. Any printers do not have this feature.

❷ Buy Now

You can order replacement toner cartridge(s) online.

❸ Troubleshooting Guide

You can view Help to solve problems.

❹ Printer Setting

You can configure various printer settings in the Printer Settings Utility window. Any printers do not have this feature.

NOTE: If your printer is connected to a network and you are a Windows user, the **SyncThru Web Service** window appears

instead of the Printer Settings Utility window. Mac OS X and Linux do not support network environments.

❺ Driver Setting (Only for Windows)
You can use the printer properties window, which allows you to access all of the printer options you need for using your printer. For details, See “Printer Settings” on page 13.

Opening the Troubleshooting Guide

Using the troubleshooting guide, you can view solutions for error status problems.

Right-click (in Windows or Linux) or click (in Mac OS X) the Smart Panel icon and select **Troubleshooting Guide**.

Using Printer Settings Utility

Using the Printer Settings Utility, you can configure and check print settings.

1. Right-click (in Windows or Linux) or click (in Mac OS X) the Smart Panel icon and select **Printer Setting**.
2. Change the settings.
3. To send the changes to the printer, click the **Apply** button.

NOTES: If your printer is connected to a network, the **SyncThru Web Service** window appears instead of the Printer Settings Utility window.

Using Onscreen Help File

For more information about **Printer Settings Utility**, click ? .

Changing the Smart Panel Program Settings

Right-click (in Windows or Linux) or click (in Mac OS X) the Smart Panel icon and select **Options**.

Select the settings you want from the **Options** window.

8 Using Your Printer in Linux

You can use your machine in a Linux environment.

This chapter includes:

- **Getting Started**
- **Installing the Unified Linux Driver**
- **Using the Unified Driver Configurator**
- **Configuring Printer Properties**
- **Printing a Document**

Getting Started

You need to download Linux software package from the Samsung website (www.samsung.com/printer) to install the printer softwares.

After the driver is installed on your Linux system, the driver package allows you to monitor a number of machine devices via fast ECP parallel ports and USB simultaneously.

The Unified Linux Driver package is supplied with a smart and flexible installation program. You don't need to search for additional components that might be necessary for the Unified Linux Driver software: all required packages will be carried onto your system and installed automatically; this is possible on a wide set of the most popular Linux clones.

Installing the Unified Linux Driver

Installing the Unified Linux Driver

1 Make sure that you connect your machine to your computer. Turn both the computer and the machine on.

2 When the Administrator Login window appears, type in *root* in the Login field and enter the system password.

NOTE: You must log in as a super user (root) to install the printer software. If you are not a super user, ask your system administrator.

3 From the Samsung website, download and unpack the Unified Linux Driver package to your computer.

4 Click the icon at the bottom of the desktop. When the Terminal screen appears, type in:

[root@localhost root]#tar zxf [FilePath]/UnifiedLinuxDriver.tar.gz[root@localhost root]#cd [FilePath]/cdroot/Linux[root@localhost Linux]#./install.sh

NOTE: If you do not use the graphical interface and failed to install the software, you have to use the driver in the text mode. Follow the steps 3 to 4, and then follow the instructions on the terminal screen.

5 When the welcome screen appears, click **Next**.

6 When the installation is complete, click **Finish**.

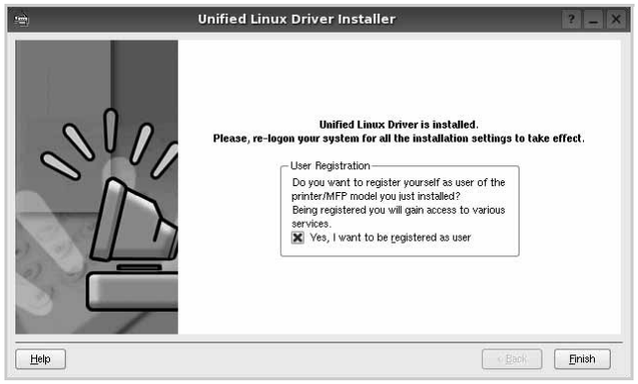

The installation program has added the Unified Driver Configurator desktop icon and Samsung Unified Driver group to the system menu for your convenience. If you have any difficulties, consult the onscreen help that is available through your system menu or can otherwise be called from the driver package windows applications, such as **Unified Driver Configurator**.

Uninstalling the Unified Linux Driver

1 When the Administrator Login window appears, type in *root* in the Login field and enter the system password.

NOTE: You must log in as a super user (root) to install the printer software. If you are not a super user, ask your system administrator.

2 Click the icon at the bottom of the desktop. When the Terminal screen appears, type in:

[root@localhost root]#cd /opt/Samsung/mfp/uninstall/
[root@localhost uninstall]#./uninstall.sh

3 Click **Uninstall**.

4 Click **Next**.

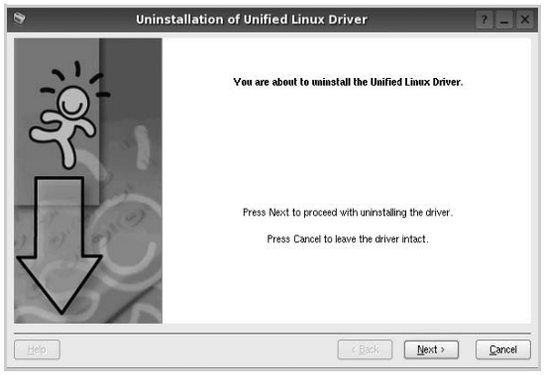

5 Click **Finish**.

Using the Unified Driver Configurator

Unified Linux Driver Configurator is a tool primarily intended for configuring Printer.

After installing the Unified Linux driver, the Unified Linux Driver Configurator icon will automatically be created on your desktop.

Opening the Unified Driver Configurator

1. Double-click **Unified Driver Configurator** on the desktop.

   You can also click the Startup Menu icon and select **Samsung Unified Driver** and then **Unified Driver Configurator**.
2. Press each button on the Modules pane to switch to the corresponding configuration window.

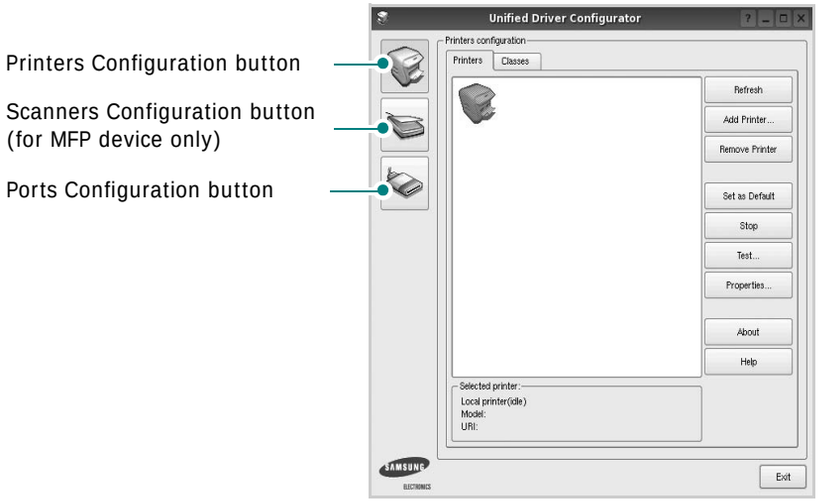

   You can use the onscreen help by clicking **Help**.
3. After changing the configurations, click **Exit** to close the Unified Driver Configurator.

Printers Configuration

Printers configuration has the two tabs: **Printers** and **Classes**.

Printers Tab

You can see the current system's printer configuration by clicking on the printer icon button on the left side of the Unified Driver Configurator window.

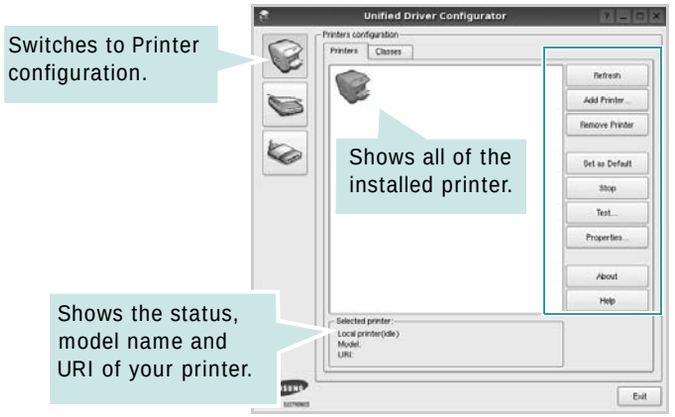

You can use the following printer control buttons:

- **Refresh**: renews the available printers list.
- **Add Printer**: allows you to add a new printer.
- **Remove Printer**: removes the selected printer.
- **Set as Default**: sets the current printer as a default printer.
- **Stop/Start**: stops/starts the printer.
- **Test**: allows you to print a test page to check if the machine is working properly.
- **Properties**: allows you to view and change the printer properties. For details, see page 31.

Classes Tab

The Classes tab shows a list of available printer classes.

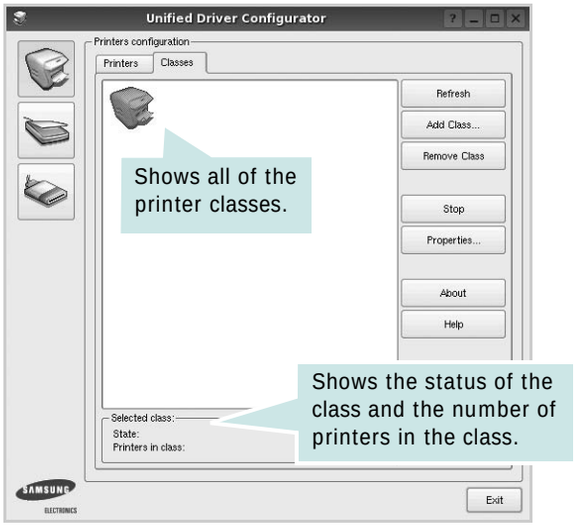

- **Refresh** : Renews the classes list.
- **Add Class... :** Allows you to add a new printer class.
- **Remove Class :** Removes the selected printer class.

Ports Configuration

In this window, you can view the list of available ports, check the status of each port and release a port that is stalled in busy state when its owner is terminated for any reason.

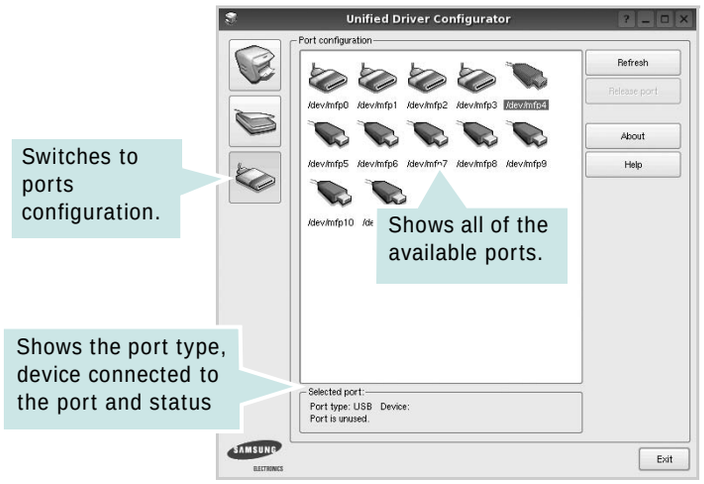

- **Refresh** : Renews the available ports list.
- **Release port :** Releases the selected port.

Configuring Printer Properties

Using the properties window provided by the Printers configuration, you can change the various properties for your machine as a printer.

1 Open the Unified Driver Configurator.

If necessary, switch to Printers configuration.

2 Select your machine on the available printers list and click **Properties**.

3 The Printer Properties window opens.

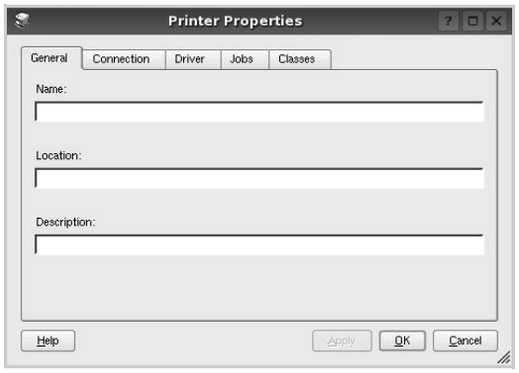

The following five tabs display at the top of the window:

- **General**: allows you to change the printer location and name. The name entered in this tab displays on the printer list in Printers configuration.
- **Connection**: allows you to view or select another port. If you change the printer port from USB to parallel or vice versa while in use, you must re-configure the printer port in this tab.
- **Driver**: allows you to view or select another printer driver. By clicking **Options**, you can set the default device options.
- **Jobs**: shows the list of print jobs. Click **Cancel job** to cancel the selected job and select the **Show completed jobs** check box to see previous jobs on the job list.
- **Classes**: shows the class that your printer is in. Click **Add to Class** to add your printer to a specific class or click **Remove from Class** to remove the printer from the selected class.

4 Click **OK** to apply the changes and close the Printer Properties Window.

Printing a Document

Printing from Applications

There are a lot of Linux applications that you are allowed to print from using Common UNIX Printing System (CUPS). You can print on your machine from any such application.

1 From the application you are using, select **Print** from the **File** menu.

2 Select **Print** directly using **lpr**.

3 In the LPR GUI window, select the model name of your machine from the Printer list and click **Properties**.

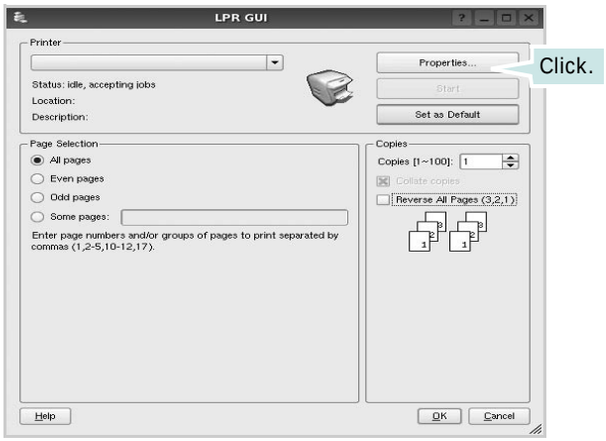

4 Change the printer and print job properties.

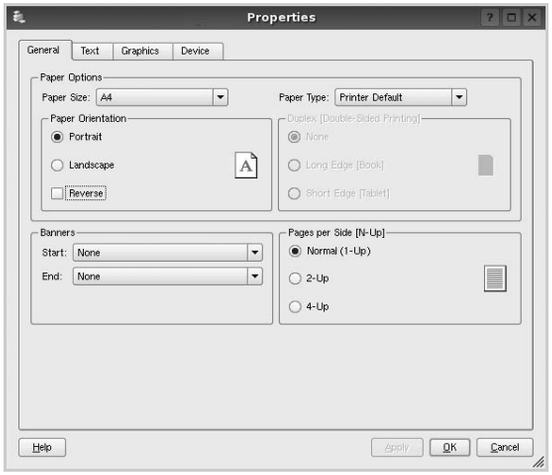

The following four tabs display at the top of the window.

- **General** - allows you to change the paper size, the paper type, and the orientation of the documents, enables the duplex feature, adds start and end banners, and changes the number of pages per sheet.
- **Text** - allows you to specify the page margins and set the text options, such as spacing or columns.
- **Graphics** - allows you to set image options that are used when printing images/files, such as color options, image size, or image position.
- **Device**: allows you to set the print resolution, paper source, and destination.

5 Click **Apply** to apply the changes and close the Properties window.

6 Click **OK** in the LPR GUI window to start printing.

7 The Printing window appears, allowing you to monitor the status of your print job.

To abort the current job, click **Cancel**.

Printing Files

You can print many different types of files on the Samsung machine device using the standard CUPS way - directly from the command line interface. The CUPS lpr utility allows you do that. But the drivers package replaces the standard lpr tool by a much more user-friendly LPR GUI program.

To print any document file:

1 Type *lpr <file_name>* from the Linux shell command line and press **Enter**. The LPR GUI window appears.

When you type only *lpr* and press **Enter**, the Select file(s) to print window appears first. Just select any files you want to print and click **Open**.

2 In the LPR GUI window, select your printer from the list, and change the printer and print job properties.

For details about the properties window, see page 32.

3 Click **OK** to start printing.

9 Using Your Printer with a Macintosh

Your machine supports Macintosh systems with a built-in USB interface or a 10/100 Base-TX network interface card. When you print a file from a Macintosh computer, you can use the PostScript driver by installing the PPD file.

NOTE: ***Some printers do not support a network interface. Make sure that your printer supports a network interface by referring to Printer Specifications in your Printer User's Guide.***

This chapter includes:

- **Installing Software for Macintosh**
- **Setting Up the Printer**
- **Printing**

Installing Software for Macintosh

The PostScript driver CD-ROM that came with your machine provides you with the PPD file to use the PS driver, Apple LaserWriter driver, for printing on a Macintosh computer.

Install the Printer driver

1. Connect your machine to the computer using the USB cable or the Ethernet cable.
2. Turn on your computer and the machine.
3. Insert the PostScript driver CD-ROM which came with your machine into the CD-ROM drive.
4. Double-click the **CD-ROM icon** on your Macintosh desktop.
5. Double-click the **MAC_Installer** folder.
6. Double-click the **MAC_Printer** folder.
7. For Mac OS 8.6~9.2, double-click the **Samsung LBP Installer Classic** icon.

   For Mac OS 10.1 or higher, double-click the **Samsung LBP Installer OSX** icon.
8. Click **Continue**.
9. Click **Continue**.
10. Click **Install**.
11. After the installation is finished, click **Quit**.

Uninstalling the Printer driver

Uninstall is required if you are upgrading the software, or if installation fails.

1. Insert the CD-ROM which came with your printer into the CD-ROM drive.
2. Double-click **CD-ROM icon** that appears on your Macintosh desktop.
3. Double-click the **MAC_Installer** folder.
4. Double-click the **MAC_Printer** folder.
5. For Mac OS 8.6~9.2, double-click the **Samsung LBP Installer Classic** icon.

   For Mac OS 10.1 or higher, double-click the **Samsung LBP Installer OSX** icon.
6. Click **Continue**.
7. Click **Continue**.
8. Select **Uninstall** and then click **Uninstall**.
9. When the uninstallation is done, click **Quit**.

Setting Up the Printer

Set up for your printer will be different depending on which cable you use to connect the printer to your computer—the network cable or the USB cable.

For a Network-connected Macintosh

NOTE: ***Some printers do not support a network interface. Before connecting your printer, make sure that your printer supports a network interface by referring to Printer Specifications in your Printer User's Guide.***

Mac OS 8.6 ~ 9.2

1. Follow the instructions on "Installing Software for Macintosh" on page 33 to install the PPD file on your computer.
2. From the **Apple** menu, select **Chooser**.
3. Click **LaserWriter 8** (the PostScript driver provided with your Macintosh).

   The name of your machine appears on the list.
4. Select **SEC000xxxxxxxxx** from the printer box (where the xxxxxxxxx varies depending on each of the machines) and Click **Select**.

   If Auto Setup does not work properly, click **Select PPD**, choose **your printer name**, and click **OK**.
5. When the setup is complete, you see your machine icon created as a desktop printer.
6. Close the **Chooser**.
7. When a message window appears telling you that you have changed your current machine, click **OK**.

Mac OS 10.1 or higher

1. Follow the instructions on "Installing Software for Macintosh" on page 33 to install the PPD file on your computer.
2. Open the **Applications** folder → **Utilities**, and **Print Setup Utility**.
   - For MAC OS 10.5~10.6, open **System Preferences** from the **Applications** folder, and click **Printer & Fax**.
3. Click **Add** on the **Printer List**.
   - For MAC OS 10.5~10.6, press the "**+**" icon then a display window will pop up.
4. Select the **AppleTalk** tab.
   - For MAC OS 10.3, select the **Rendezvous** tab.
   - For MAC OS 10.4, click **Default Browser** and find the **Bonjour**.
   - For MAC OS 10.5~10.6, click **Default** and find the **Bonjour**.

   The name of your machine appears on the list. Select **SEC000xxxxxxxxx** from the printer box, where the **xxxxxxxxx** varies depending on your machine.
5. If Auto Select does not work properly, select **Samsung** in **Printer Model** and **your printer name** in **Model Name**. Your machine appears on the Printer List and is set as the default printer.
   - For MAC OS 10.5~10.6, if Auto Select does not work properly, select **Select a driver to use...** and **your printer name** in **Print Using**.
6. Click **Add**.

For a USB-connected

Mac OS 10.1 or higher

1. Follow the instructions on "Installing Software for Macintosh" on page 33 to install the PPD file on your computer.
2. Open the **Applications** folder → **Utilities**, and **Print Setup Utility**.
   - For MAC OS 10.5~10.6, open **System Preferences** from the **Applications** folder, and click **Printer & Fax**.
3. Click **Add** on the **Printer List**.
   - For MAC OS 10.5~10.6, press the "**+**" icon then a display window will pop up.
4. Select the **USB** tab.
   - For MAC OS 10.4, click **Default Browser** and find the USB connection.
   - For MAC OS 10.5~10.6, click **Default** and find the USB connection.
5. Select **your printer name** and click **Add**.
6. If Auto Select does not work properly, select **Samsung** in **Printer Model** and **your printer name** in **Model Name**.

   Your machine appears on the Printer List and is set as the default printer.
   - For MAC OS 10.5~10.6, if Auto Select does not work properly, select **Select a driver to use...** and **your printer name** in **Print Using**.
7. Click **Add**.

Printing

NOTES:

- The Macintosh printer's properties window that appears in this User's Guide may differ depending on the printer in use. However the composition of the printer properties window is similar.
- ***You can check your printer name in the supplied CD-ROM.***

Printing a Document

When you print with a Macintosh, you need to check the printer software setting in each application you use. Follow these steps to print from a Macintosh.

1. Open a Macintosh application and select the file you want to print.
2. Open the **File** menu and click **Page Setup** (**Document Setup** in some applications).
3. Choose your paper size, orientation, scaling, and other options and click **OK**.

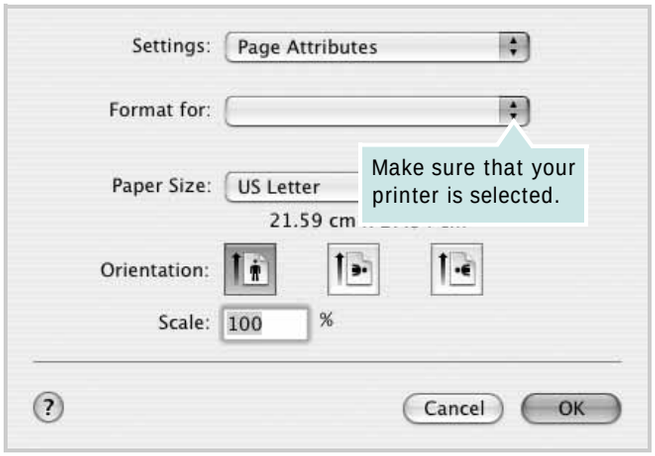

▲ Mac OS 10.3

4. Open the **File** menu and click **Print**.
5. Choose the number of copies you want and indicate which pages you want to print.
6. Click **Print** when you finish setting the options.

Changing Printer Settings

You can use advanced printing features when using your printer.

From your Macintosh application, select **Print** from the **File** menu. The printer name which appears in the printer properties window may differ depending on the printer in use. Except for the name, the composition of the printer properties window is similar.

Layout Setting

The **Layout** tab provides options to adjust how the document appears on the printed page. You can print multiple pages on one sheet of paper.

Select **Layout** from the **Presets** drop-down list to access the following features. For details, see "Printing Multiple Pages on One Sheet of Paper" on the next column.

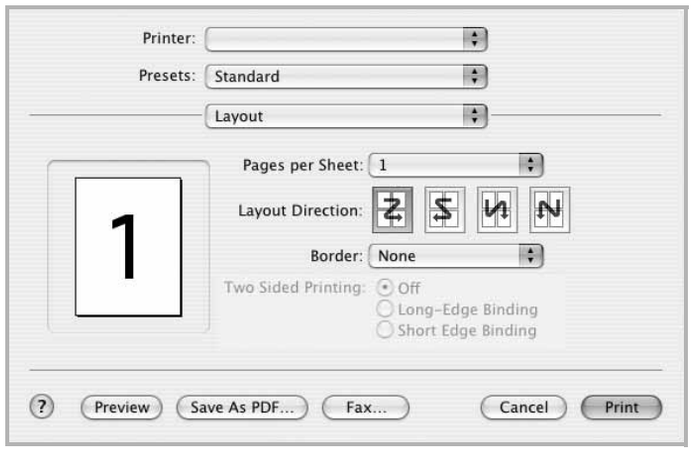

▲ Mac OS 10.3

Printer Features Setting

The **Printer Features** tab provides options for selecting the paper type and adjusting print quality.

Select **Printer Features** from the **Presets** drop-down list to access the following features:

▲ Mac OS 10.3

Reverse Duplex

Allows you to select general print order compare to duplex print order.

Image Mode

Image Mode allows the user to enhance printouts. The available options are Normal and Text Enhance.

Fit to Page

This printer feature allows you to scale your print job to any selected paper size regardless of the digital document size. This can be useful when you want to check fine details on a small document.

Paper Type

Set **Type** to correspond to the paper loaded in the tray from which you want to print. This will let you get the best quality printout. If you load a different type of print material, select the corresponding paper type.

Resolution(Quality)

The Resolution options you can select may vary depending on your printer model. You can select the printing resolution. The higher the setting, the sharper the clarity of printed characters and graphics. The higher setting also may increase the time it takes to print a document.

Printing Multiple Pages on One Sheet of Paper

You can print more than one page on a single sheet of paper. This feature provides a cost-effective way to print draft pages.

1. From your Macintosh application, select **Print** from the **File** menu.
2. Select **Layout**.

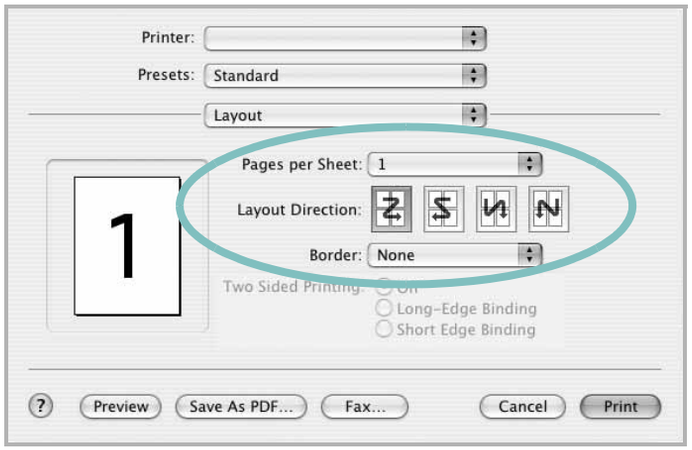

▲ Mac OS 10.3

3. Select the number of pages you want to print on one sheet of paper on the **Pages per Sheet** drop-down list.
4. Select the page order from the **Layout Direction** option.

   To print a border around each page on the sheet, select the option you want from the **Border** drop-down list.
5. Click **Print**, and the printer prints the selected number of pages on one side of each page.

Duplex Printing

You can print on both sides of the paper. Before printing in the duplex mode, decide on which edge you will be binding your finished document. The binding options are:

Long-Edge Binding: Which is the conventional layout used in book binding.

Short-Edge Binding: Which is the type often used with calendars.

1. From your Macintosh application, select **Print** from the **File** menu.
2. Select the **Layout**.

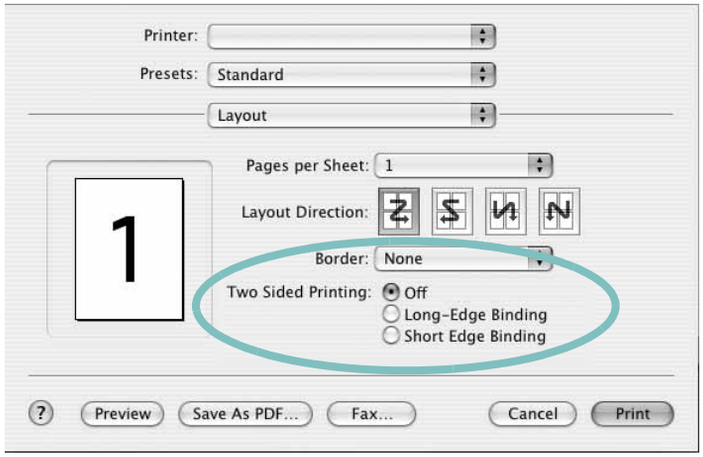

▲ Mac OS 10.3

3. Select a binding orientation from **Two Sided Printing** option.
4. Click **Print** and the printer prints on both sides of the paper.

CAUTION: If you have selected duplex printing and then try to print multiple copies of a document, the printer may not print the document in the way you want. In case of "Collated copy" , if your document has odd pages, the last page of the first copy and the first page of the next copy will be printed on the front and back of one sheet. In case of "Uncollated copy", the same page will be printed on the front and back of one sheet. Therefore, if you need multiple copies of a document and you want those copies on both sides of the paper, you must print them one at a time, as separate print jobs.

SOFTWARE SECTION

INDEX

A

advanced printing, use 18

B

booklet printing 19

D

document, print
- Macintosh 35
- Windows 12

double-sided printing 20

E

Extras properties, set 16

F

favorites settings, use 17

G

Graphics properties, set 15

H

help, use 17, 23

I

install
- printer driver
  - Macintosh 33
  - Windows 4

installing
- Linux software 28

L

Layout properties, set
- Macintosh 35
- Windows 13

Linux
- driver, install 28
- printer properties 31
- printing 32

M

Macintosh
- driver
  - install 33
  - uninstall 33
- printing 35
- setting up the printer 34

MFP driver, install
- Linux 28

N

n-up printing
- Macintosh 36
- Windows 18

O

orientation, print 32
- Windows 13

overlay
- create 22
- delete 22
- print 22

P

Paper properties, set 14

paper size, set 14
- print 32

paper source, set 32
- Windows 14

paper type, set
- Macintosh 36
- print 32

poster, print 19

PostScript driver
- installing 23

print
- document 12
- fit to page 20
- from Macintosh 35
- from Windows 12
- N-up
  - Macintosh 36
  - Windows 18
- overlay 22
- scaling 20
- watermark 21

print resolution 32

printer driver, install
- Linux 28

printer properties
- Linux 32

printer properties, set
- Macintosh 35
- Windows 13, 23

printer resolution, set
- Macintosh 36
- Windows 15

printer software
- install
  - Macintosh 33
  - Windows 4
- uninstall
  - Macintosh 33
  - Windows 11

printing
- booklets 19
- double-sided 20
- from Linux 32

R

resolution
- printing 32

S

setting
- darkness 15
- favorites 17

image mode 15
resolution
Macintosh 36
Windows 15
toner save 15
true-type option 15
software
install
Macintosh 33
Windows 4
reinstall
Windows 10
system requirements
Macintosh 33
uninstall
Macintosh 33
Windows 11
status monitor, use 26

T

toner save, set 15

U

uninstall, software
Macintosh 33
Windows 11
uninstalling
MFP driver
Linux 29

W

watermark
create 21
delete 21
edit 21
print 21

www.samsungprinter.com

Rev.8.00